BALÓNY KUBÍČEK spol. s r.o.
Seat: Jarní 2a, 614 00 Brno
Czech Republic
tel.: +420 545 422 620
fax: +420 545 422 621
info@kubicekballoons.cz
www.kubicekballoons.cz

Maintenance Manual Supplement

Cameron Balloons US Baskets and Burners

Type: .....

Model: .....

Serial No.: .....

Registration: .....

This balloon Maintenance Manual Supplement is initially approved by EASA under major change approval number 10070614, dated 26 July 2019.

Subsequent revisions are approved either by EASA or by authority of DOA, no. EASA.21J.277 as detailed on page USBEC-3.

This balloon Maintenance Manual Supplement is approved in accordance with 14 CFR Section 21.29 for U.S. registered aircraft and is approved by the Federal Aviation Administration. Initial date of approval: 31 July 2019

This balloon is to be preserved in an airworthy condition in compliance with instructions and information contained herein.

INTENTIONALLY LEFT BLANK

0.1 Record of revisions

Any revision of this Manual must be recorded in the following table.

Revision Number	Affected Section	Affected Pages	Date of Issue

Revisions to this Manual are published on the Kubicek balloons web site at www.kubicekballoons.eu.

The new or amended text in the revised page is indicated by a black vertical line in the outer margin, and the revision number and the date is shown on the bottom of the page.

CAUTION	Mandatory revisions are introduced by a Service Bulletin published on the Kubicek Balloons web site www.kubicekballoons.eu.

INTENTIONALLY LEFT BLANK

Contents

SECTION 1 – GENERAL

1.1 INTRODUCTION

This is a Maintenance Manual Supplement for the use for balloons combining Cameron Balloons US bottom-end with Kubicek Balloons envelope.

This supplement was created by adopting applicable pages of the original Maintenance Manual by Cameron Balloons US, Revision G, November 2016. The original Maintenance Manual is available from www.cameronballoons.com.

1.2 APPLICABILITY

All balloons combining Cameron Balloons US bottom-ends with Kubicek Balloons envelopes.

NOTE	This supplement does not apply to balloons for which the Airworthiness Certificate shows Cameron Balloons Ltd. as the manufacturer. Maintenance and inspection procedures for British-built Camerons ("Cameron Balloons Ltd." shown as manufacturer on Airworthiness Certificate) are specified by the Cameron Balloons Ltd. Free Flight Hot Air Balloon Maintenance Manual.

1.3 MAINTENANCE CATEGORIES

DOCUMENTATION OF WORK

Some repair and maintenance work may be completed by the owner/operator of the balloon, provided they hold a current FAA Pilot Certificate. The work which may be performed is listed under Sections 4, 5 and 6. All repair/maintenance items MUST be recorded in the aircraft log book. The entry must include (1) the date, (2) name and pilot certificate number of person who made the repair or who approved it, (3) the source of materials used in the replacement (with invoice number, if possible), (4) a description of work done and (5) the total hours on the balloon when work was performed. Samples of logbook entries are as follows:

Gore 5-6 panel F green, Pliobond patch 2" diameter. near tape 6. Fabric from original repair fabric kit. TT=105 hr. James Hendrix, Pilot Cert. # XXXXXXXX, 9-25-70
Reshaped basket with ropes; washed down basket, tanks. Replaced batteries in Ball variometer. TT=320.5 hr. Elvis Costello, Cert. # XXXXXXXXX, 3-29-96
Added banner ties on vertical load tapes 5, 6, 7 at seams G/H and L/M. Work done by Marty Smith using 3/4" flat tape, Cameron Balloons invoice # 12100. TT=22 hr. Kelly Ortel, Aug. 27, 1973, Pilot Certificate # XXXXXXXXX
Replaced Kevlar suspension cable #6 per Maint. Manual instructions. New cable from Cameron US, invoice # 100345. Cable Batch No. #89065 Stacy Collins, Sep. 20, 1974, certificate # XXXXXXXXX
(source: Instructions for Continued Airworthiness, Issue 3, November 01, 2012 – Cameron Balloons US; page 21, Section 2, chapter 2.1 Documentation of Work)

1.6 Definitions and Abbreviations

CBUS (CB)	Cameron Balloons US
MM	Maintenance Manual
MMS	Maintenance Manual Supplement

1.7 Balloon Technical Description

A complete description of the balloon, its systems, controls and equipment is provided in the Kubicek Balloons Flight Manual Supplement (document no. B.3105-FMS_USBEC), section 6.

SECTION 2 - AIRWORTHINESS LIMITATIONS

2.5 Life Limited Items

	Component	Limit
Basket	none	
Burner	MK III & MK IV Standard: REGO #7553 Blast Valve Blast Valve O-ring part number F128R	100 hrs or annually
	MKIII & MK IV Standard: REGO #7553 Blast Valve Blast Valve Teflon back-up ring part number F128T	
	MK IV Standard: REGO #7901 Blast Valve Blast Valve O-ring part number F901O	
	All burners: Liquid Fuel Hoses Vapor Fuel Hoses	10 years in service
Fuel System	Manifold Fuel Hoses	10 years in service
Fuel Tank	Pressure Relief Valve	10 years in service

SECTION 3 - ENVELOPE REPAIRS AND MAINTENANCE

No change.

SECTION 4 - BASKET REPAIR AND MAINTENANCE

BASKETS

A wide range of basket models are certified for use on Cameron balloons. These include the current Sport baskets, a selection of sizes of the more elegant Aristocrat baskets and several sizes of large partitioned baskets for passenger ride businesses. The open style baskets use the Cameron FlexiRigid™ burner support system or a fixed corner socket, which incorporates flexible nylon, lexan or other approved burner support poles. A few older balloons have baskets which incorporate flexible basket suspension cables only, without burner supports. All the partitioned baskets use fixed corner socket burner frame.

All Cameron baskets incorporate stainless steel suspension cables, which form continuous support cables woven through the floor of the bottom of the basket. The cable ends attach to carabiners (snaplinks) at the burner frame corners. The side walls of all Cameron baskets are woven. The floor of all Cameron baskets is either woven or made of marine grade plywood. An optional interior CushionFloor™ may be installed in the basket. (source: Instructions for Continued Airworthiness, Issue 3, November 01, 2012 – Cameron Balloons US; page 19, Section 1, chapter 1.7 Baskets)

Cleaning - The basket may be washed with clean water without detergents. (source: Instructions for Continued Airworthiness, Issue 3, November 01, 2012 – Cameron Balloons US; page 22, Section 2, chapter 2.2 Cleaning)

The basket may be varnished using a polyurethane varnish diluted to about 50% normal strength. The exterior of the basket may be varnished, but the interior should not be varnished (varnishing the entire basket prevents re-moistening of the rattan). The basket must not be used until the flammable solvent has completely evaporated and the varnish is completely dry. Generally, the lack of any residual

solvent odor is a good indicator of this.
The basket may be re-shaped by using tensioning ropes to pull in bulges in the wicker, soaking the wicker with water, and allowing it to dry before removing the ropes which are holding it in the correct shape. When adjusting the ropes, slightly over correct the distortion to allow for spring back when the ropes are later removed. The basket will retain the shape in which it dries, except that it will spring back slightly in the direction it had been distorted by use.
The basket wicker should be soaked with water every few months, and more frequently in arid climates.
Repairing or replacing the leather or fabric bolster on the top edge of the basket, and repairing or replacing the leather or rawhide scuff piece at the bottom edge of the basket is permitted, provided that the skids on the floor are not removed, and provided that there is no modification or damage to the suspension cables.
Broken vertical wicker may be reinforced with nylon rods as outlined in Appendix 3 (Section 7.5), provided there are no more than two vertical pieces of wicker broken between three pieces, which are unbroken on each side. If more than three contiguous vertical pieces are replaced in the repair, the repair work must be inspected and certified by an FAA Certified Repair Station.
Broken horizontal wicker pieces may be replaced as outlined in Appendix 3 (Section 7.6). Replacement of a section larger than 12 inches in the horizontal direction and 1 inch in the vertical direction must be inspected and certified by an FAA Certified Repair Station.
Broken skids MUST be replaced by a certified repair person. If the break occurs AT or INSIDE the outermost bolts, or if the break exposes a bolt that could impinge on the bottom of a tank, the skid MUST be replaced before the next flight.
Single skids with a break outside the outermost bolts MUST be replaced during the annual or 100 hour inspection, but need not be replaced between inspections. If more than one skid is broken, whether an interior or exterior skid, regardless of the location of the break, the skids must be replaced before the next flight by a Certified Repair Person.
External toggle style handles on Sport Baskets may be replaced or repaired with rope and wooden toggles supplied by Cameron Balloons U.S. (source: Instructions for Continued Airworthiness, Issue 3, November 01, 2012 – Cameron Balloons US; page 27, Section 2, chapter 2.6 Basket)

SUSPENSION SYSTEM

Non-certified persons may replace the snaplinks (carabiners #B111) with snaplinks (carabiners) provided by Cameron Balloons U.S. as original equipment replacement parts. The owner-operator is required to enter the installation of the new carabiners in the balloon logbook. SUBSTITUTION OF CARABINERS EXCEPT AS SPECIFIED IN THE TYPE DESIGN MAY BE DANGEROUS, IS ILLEGAL, AND IS PROHIBITED.
Non-certified persons may replace or remove the rubber or nylon grommets between the FlexiRigid™ pole retaining sleeve and the corner bracket on the burner frame. The bolt in this position may be replaced with a quick-pin, Cameron Balloons part No. B037. The entire retaining sleeve and bushing assembly may be removed completely, and the balloon may be operated without FlexiRigid™ poles. Replacement of the grommets or the retaining sleeve must be inspected and entered into the balloon logbook by the owner-operator.
FlexiRigid poles MUST be replaced with Cameron Balloons supplied FlexiRigid poles ONLY. Non-shouldered FlexiRigid poles, used in most partitioned baskets, may be fabricated from stock material provided by Cameron Balloons ONLY. source: Instructions for Continued Airworthiness, Issue 3, November 01, 2012; page 26, Section 2, chapter 2.5 Suspension System)

For maintenance and repair instructions for baskets and suspension systems, see Appendices 3 and 5 of this MMS.

SECTION 5 - BURNER REPAIRS AND MAINTENANCE

BURNER AND FUEL SYSTEM

Cameron balloons, in the United States, have been approved with single, double, triple and quadruple burners. Refer to Section 6 for a complete list of part numbers and descriptions. The part number and serial number of these burners can be found etched into the side of a corner bracket on the MK III burners, the side of a burner can on the MK IV Standard, MK IV Super and MK IV Ultra burners and on a coil bracket on the Sirocco burners.

The burners have zero, one or two Whisper™ burners, which are auxiliary burners used to supplement the main burner, provide redundancy on all burners and serve as a quiet burner near livestock. All MK IV burners have the Whisper™ burner; the MK III burner may have a retrofit of a Whisper™ burner (Cameron part no. F193) which must only be installed by a repair station and documented via FAA Form 337. (source: Instructions for Continued Airworthiness, Issue 3, November 01, 2012; page 18, Section 1, chapter 1.6 Burner and Fuel System)

Cleaning - The burner can, coils and corner brackets may be washed and polished using any commercially available stainless steel, brass or copper cleanser, providing that any metal brush or pad used is made of STAINLESS STEEL. If the stainless steel burner is polished with a non-stainless steel metal brush or scouring pad, metal particles may deposit onto the burner and will cause rust or corrosion to form on the burner coils. This rust or corrosion is not from the burner itself, but is nonetheless unsightly. Do NOT use abrasive cleaning compounds on the highly-polished stainless steel parts of the burner as these will destroy the mirror finish. Currently at the Cameron Balloons Factory in Michigan we use a product called Peek to clean burners. Peek is a product of Tri-Peek International Inc. of Conyers Ga. and is widely available throughout the country. DO NOT use any caustic cleanser on any enameled or anodized part as damage will result. (source: Instructions for Continued Airworthiness, Issue 3, November 01, 2012; page 23, Section 2, chapter 2.2 Cleaning)

Non-certified persons may replace fuel hoses and hose end fittings, which have been purchased as original equipment replacement parts from Cameron Balloons U.S., according to instructions in Appendix 4 (Section 6.7). The owner-operator is required to inspect the parts and log them in the balloon logbook.

Blast valve stems may be lubricated by spraying silicone lubricant onto the valve stem, where it protrudes from the bonnet. The stem area should be cleaned of any dust or debris prior to lubrication. In order to work the lubricant down into the stem seal, open and close the valve while spraying on the lubricant.

The lubrication portal on the Cameron MK IV Super, MK IV Ultra & Sirocco blast valve may be opened and lubricant introduced as described in Appendix 4 (Section 6.9). (Recommended approx. each 20 hours of operation).

The MK IV ULTRA burner Whisper™ valve may be lubricated as described in Appendix 4 (Section 6.9). (Recommended approx. each 20 hours of operation).

The MK IV ULTRA burner has a fuel filter attached either to the vapor fuel hose manifold block interface (vapor fed) or to the blanking plug (liquid fed). This filter may be removed and cleaned with a solvent such as trichloroethane as described in Appendix 4 (Section 6.25). The SIROCCO burner has a filter screwed directly into the manifold block. See Appendix 6, chapter Sirocco burner (''Appendix G''), Figs. 1 & 2. It may be cleaned as above, see Appendix 6, chapter Sirocco burner (''Appendix G''), Section H.

The MK IV ULTRA & SIROCCO burner Pilot Light Jet may be removed and cleaned as described in Appendix 4 (Section 6.25) & Appendix 6, chapter Sirocco burner (''Appendix G''), Section I.

Burner jets may be tightened or replaced as outlined in Appendix 4 (Section 6.8).

Bolts, friction washers and nuts connecting the inner frame to the burner, the outer frame to the inner

frame or any part of the Gimbal Block may be replaced using original equipment replacement parts from Cameron Balloons U.S. See Appendix 4 for appropriate part numbers. The tightness of the gimbal may be adjusted.
All components of the piezoelectric ignitor may be replaced using parts provided by Cameron Balloons U.S., as outlined in Appendix 4 (Sections 6.26, 6.27, 6.28) or Appendix 6, chapter Sirocco burner (''Appendix G''). (source: Instructions for Continued Airworthiness, Issue 3, November 01, 2012; page 25-26, Section 2, chapter 2.4 Burner and Fuel system)

For maintenance and repair instructions, see Appendix 4 of this MMS.

SECTION 6– FUEL CYLINDERS REPAIRS AND MAINTENANCE

CAUTION	The fuel tank must be completely evacuated before methanol may be added. As an alternative method, an adaptor may be fabricated to introduce methanol during refueling.

The stem and check valve parts of the liquid withdrawal valve on the tanks and the hose end fitting interior may be lubricated with silicone spray.
Methanol may be added, via the refueling hose, to the fuel tanks between flights.
Electric tank heaters and tank jackets may be installed according to directions in Appendix 4 (Section 6.38). If tank heaters other than 168 or 180 watt units provided by Cameron Balloons US are installed, the heating time chart in this manual and the Flight Manual is inaccurate. The pilot must otherwise determine safe heating times and update the Flight Manual heating times accordingly. (source: Instructions for Continued Airworthiness, Issue 3, November 01, 2012; page 26, Section 2, chapter 2.4 Burner and Fuel system)

Cleaning - The tanks may be washed, provided the liquid withdrawal valve is covered or plugged, the vapor quick release fitting is covered, and the excess pressure relief valve is covered. (source: Instructions for Continued Airworthiness, Issue 3, November 01, 2012; page 22, Section 2, chapter 2.2 Cleaning)

For maintenance and repair instructions, see Appendices 4 and 7 of this MMS.

SECTION 7 – INSTRUMENT REPAIRS AND MAINTENANCE

No change.

SECTION 8 – INSPECTION SCHEDULE

8.1 General

This section describes inspection schedule for all balloons combining Kubicek Balloons envelopes with CBUS bottom-ends (basket, burner, burner frame and fuel system).

8.2 Scheduled Inspections

1. Balloons: 100 hour/annual inspection
2. Fuel tanks: 10- year inspection

8.4 100 Hour/Annual Inspection

For the 100 hour/annual inspection of balloon combining KB envelope with CBUS bottom-end, the same checklist as for inspecting KB balloon must be used (the 100 Hour/Annual Inspection Checklist - see Appendix 2 of the main MM, document number B.3205).

8.15 Inspection Criteria / Techniques

Check that all applicable service bulletins and Ads (KB's for the envelopes and CBUS's for the bottom-end assembly – these can be part of this MMS, or the later ones are issued separately) have been followed and recorded in the balloon's log book. A list of Service Bulletins which may apply to the balloon can be found on the KB's website. If there is no entry in the logbook of a relevant Service Bulletin being completed, contact KB.

8.15.3 Baskets

For inspecting of the basket, see Section 4 and Appendices 3 and 5 of this MMS.

8.16 Fuel Cylinders

8.16.2 Annual / 100 hour inspection

For inspecting of the fuel cylinders, see Section 6 and Appendices 4 and 7 of this MMS.

8.19 Non-scheduled Inspections

8.19.3 Hard Landing Inspection

Normal pre-flight inspections are intended to identify unairworthy conditions caused by normal wear and tear and/or other circumstances. However, if the aircraft has been subjected to extreme or abnormal shock loading additional inspection procedures are necessary.

Extreme shock loading may occur during a hard impact landing (either from vertical or horizontal speed where there is an abrupt deceleration), during certain extreme tether operations, from a severe ground-handling event (such as being dropped off the back of a truck), or other similar circumstances. In such case, the aircraft (or affected component, if the shock loading was limited to part of the aircraft such as a basket being dropped off a truck) MUST be inspected prior to the next flight as described below.

The visual and functional checks may be carried out by the owner/operator or other authorized personnel. It is recommended that the Annual/100 hour inspection checklist be used as a guide to determine the specific visual inspections needed.

See the Appendix 3 and Appendix 4 for allowable damage limits and repair procedures. The owner/operator may only perform repairs covered in sections 4, 5 and 6 of this supplement (NOT in the Appendices of this supplement). All other procedures must be performed in accordance with this supplement by suitably authorized personnel (applies to procedures specified in the Appendices of this supplement). (source: Instructions for Continued Airworthiness, Issue 3, November 01, 2012; page 1 of 2, Appendix V – Inspection Procedures After A Hard Landing Or Other Abnormal Shock Loading)

Visual Inspections

- Basket
  - A complete visual inspection of the basket should be performed.
- Burner and Fuel System
  - Each component of the burner and fuel system (burner, burner frame, tank, hose, tank-belt, etc.) should be inspected for damage including checks for distorted, bent, or otherwise damaged components.

Functional Checks

- Burner and Fuel System
  - A complete functional check of the burner and fuel system must be carried out. As a minimum each burner should be checked for leaks and proper operation (including each valve – main blast valve, whisper valve, pilot light valve, and cross-flow valve). Each tank should be checked for leaks and proper operation, to ensure that each tank will deliver fuel to the burner in the normal manner.

Log Book Entries

- Completion of the inspection should be entered in the aircraft's log book.
- Any maintenance that was performed as a result of the inspection must be documented in the aircraft log book and the aircraft returned to service by an appropriately authorized person

NOTE	A cylinder that leaks, is bulged, dented, has defective valves or safety devices, fire or heat damage, rust or corrosion **MUST NOT** be put into service **UNTIL** it has been inspected and properly repaired by a certified repair person.

(source: Instructions for Continued Airworthiness, Issue 3, November 01, 2012; page 1-2 of 2, Appendix V – Inspection Procedures After A Hard Landing Or Other Abnormal Shock Loading)

8.20 Life Limited Items

See chapter **2.5 Life Limited Items** of this supplement.

SECTION 9 – APPENDICES

APPENDIX 3 – BASKET AND SUSPENSION SYSTEM MAINTENANCE AND REPAIR INSTRUCTIONS (''Section 7'')

SECTION 7

BASKET AND SUSPENSION SYSTEM

7.1 GENERAL DESCRIPTION

Cameron Balloons US offers three different basket styles and in many sizes and with three floor material choices. The first basket style is the **FLEXIBLE SUSPENSION SYSTEM** (an older design English-built). The second style basket is the **FLEXIRIGID™ BURNER SUPPORT SYSTEM**. The third style basket is the **PARTITIONED BASKET,** which also uses the **FLEXIRIGID™ BURNER SUPPORT SYSTEM** and is for larger passenger loads. In the logbook, flight manual and on the basket identification plate, the part number is followed by an Issue letter and the last digit indicates the basket size. For example; CB301C-4 is the part number for an Aristocrat 42x58 basket. See Appendix J for solid floor baskets.

The baskets incorporating the FlexiRigid™ burner support system differ from the flexible suspension baskets in the placement of the suspension cables and the addition of retaining tubes woven into the baskets to support the FlexiRigid™ poles.

The partitioned baskets are constructed with a rigid frame around the top edge and incorporate woven partitions to divide the basket into passenger compartments and pilot/fuel compartment.

NOTE:
Unless specified, repair methods described herein are common to all basket styles listed above.

7.2 BASKET SKIDS

Skids are made of Maple, Red Oak or Ash. Maple is the current production standard and the preferred repair/replacement skid material. Pre-drilled and custom fit skids are available from Cameron Balloons US for every basket. The three approved woods may be used interchangeably and are easily purchased from local suppliers. The old skid should be used as a pattern to properly construct a replacement skid. A strip of nylon or UHMW plastic of 1/2" maximum thickness may be added to the bottom edge of each skid. Stainless steel screws inserted in countersunk holes are recommended for installation.

A broken skid must be replaced unless the break is outside the outermost bolt. If the break is at or inside the outermost bolt, the skid must be replaced. Refer to Section 2.6, *Preventive Maintenance* and Section 7.12, *Allowable Damage* for additional damage limits.

The skid can be removed by slightly grinding the nut and bolt, which is countersunk into the inner skid. The nut and bolt has been center punched or peened, in order to lock the nut in place. After the locking burr is ground off, remove the nut in the normal manner using a socket wrench.

Both inside and outside skids are countersunk. The outside skid is countersunk to slightly indent the head of the bolt. If this outside skid countersinking is not done, the entire head of the bolt will be worn off, especially when the basket is moved on an abrasive surface such as concrete. The inside skid is countersunk to prevent the nuts and bolts from coming in contact with either the fuel tanks or the occupants in the basket. If the bolts are allowed to contact the tanks, **a gouge will occur which could render the tank unairworthy**. When replacing a skid that has exposed a bolt, carefully inspect the bottom of the tank for dents and scratches.

The removed skid should be used as a pattern for its replacement, including the angle of cut at the ends and the location of the bolt holes.

Always use new bolts, washers and nuts. Any minor cosmetic damage done to inside skids when grinding off excess bolt length may be repaired by sanding.

Replacement skids are best acquired from Cameron Balloons US and can normally be shipped the same day as ordered. Have ready the basket part number when ordering a replacement skid. Acquiring the skid material locally and fabricating the skids in the field will generally be more expensive and of lower quality than if acquired from Cameron Balloons.

7.3 BOTTOM SCUFF TRIM

The bottom edge of most Cameron baskets are fitted with either tanned leather or rawhide. Older English built baskets usually have rawhide. All baskets built by Cameron Balloons US incorporate tanned leather or TuffStuff™, a polymer plastic coating. The purpose of the scuff trim is to protect the lower edge weave (curve weave) from abrasion. The position of the leather or rawhide should be to provide as much coverage and protection to the bottom edge heavy curve weave as possible.

Scuff leather is a 10 inch wide strip of dyed 9-10 oz. latigo leather or 7 inch wide limed rawhide. The installation techniques described here are the same for rawhide and leather, except that leather should be soaked for about 5 minutes in lukewarm water and rawhide should be soaked for several hours. In the following description, unless otherwise noted, "leather" refers to either rawhide or tanned leather.

The scuff leather is attached to the basket by a lacing method. The old method uses leather lacing to install both the side pieces and corner pieces. The current method uses 1/8" polyester line, dyed to match the leather color, to attach the side pieces. The corner pieces are laced to the side pieces with tanned leather lace. Sport baskets, which are a variation of the Aristocrat basket, do not have corner pieces. The Sport basket skuff leather sides are laced directly to each other with leather lace.

The leather is NOT pre-punched. Punching must be done one hole at a time as the leather is installed. This method is used to align the holes with the spaces between rattan uprights in the basket.

The leather should be installed along the top edge first.

A) SCUFF LEATHER TOP EDGE LACING:

Begin just under the lowest layer of colored weave (on Sport and newer Aristocrat baskets) or one row below the rope handles (on older Aristocrat baskets).

Punch the lacing holes in the leather about 3/8" from the outer edge. The 3/8" at the edge of the leather will prevent the lacing from tearing out after the leather has dried. The 3/8" will also enable you to tuck the edge of the leather into the weave (use a tool such as a dull screwdriver). The leather is not tucked into the weave on the bottom edge.

1) Tie one end of the polyester lace around an upright or horizontal curve weave on the side near the junction of the corner and side.

2) Place the leather piece on the basket with approximately 2-3" (6" on Sport models) extra leather extending towards the corner. Support both ends of the leather piece with spring clamps around the rope handles.

3) Punch the first hole directly above the tie off.

4) Insert the lace through the hole from the back side of the leather, up and through the space between the two uprights directly above the hole and into the basket. The lace must pass between the dyed weave row and highest curve weave row.

5) Guide the lace around the inner side of the upright and pull the lace through the adjacent upright space. The lace must pass between the dyed weave row and highest curve weave row.

6) Punch the next hole half way between the next two adjacent uprights. Insert the lace through the hole from the back side of the leather, up and through the space between the two uprights directly above the hole and into the basket. The lace must pass between the dyed weave row and highest curve weave row. Pull the lace tight. Tuck the leather edge between the row of curve weave.

7) Repeat steps (4) through (6) until the side top is complete.

8) This method is suitable for the end top as well.

B) SCUFF LEATHER BOTTOM EDGE LACING:

Pull the leather down as far as the it will go, usually about 3 inches onto the floor of the basket.

The lace follows a specific route to prevent abrasion damage to the lace and to stretch the leather tightly against the wicker.

The longer sides of the basket require a different route than the shorter ends.

1) LONG SIDE BOTTOM EDGE:

a) Tie one end of the polyester lace around a piece of horizontal curve weave near the junction of the basket corner and side, approximately 1/2" above the lower edge of leather.

b) Pass the lace into the basket.

c) Punch the first hole directly below the tie off and between two floor broomsticks.

d) Pull the lace through the curve weave at a spot directly behind the hole. Insert the lace through the hole from the back side of the leather.

e) Guide the lace down to and through the space between the closest rows of floor weave that will not be covered when the leather is stretched tight. This is usually the first row below the leather edge.

f) Punch the next hole between the next two adjacent floor broomsticks.

g) Route the lace over the adjacent floor broomstick and out through the floor at the same level as step (e). Pull the lace through floor weave and hole simultaneously.

h) Guide the lace through the same space as it was pulled from and repeat steps (e) through (h) as necessary to complete the side lower edge.

2) SHORT SIDE BOTTOM EDGE:

a) Tie one end of the polyester lace around a piece of horizontal curve weave near the junction of the basket corner and side, approximately 1/2" above the lower edge of leather.

b) Pass the lace into the basket.

c) Punch the first hole directly below the tie off.

d) Pull the lace through the curve weave at a spot directly behind the hole. Insert the lace through the hole from the back side of the leather.

e) Guide the lace down to and through the floor weave and into the crevice created by the two end floor broomsticks.

f) Guide the lace along the crevice for about two inches and then out between the floor weave.

g) Punch the next hole in the leather directly above the spot where the lace exited the floor weave.

h) Insert the lace into the new hole from the back side and pull tight.

i) Pepeat steps e through h.

These attachment methods leave almost no exposed lacing on the bottom of the basket. The existing lacing can **and should** be studied as an example.

3) CORNER PIECES - ARISTOCRAT BASKETS:

The corners are installed **after** the adjoining side and end pieces have been installed.

a) The corner piece is centered between the rope handles and laced on along the top through the inner three punched holes first.

b) Use the corner piece as a guide. Trim the edges of the side and end pieces to match the curve of the corner piece plus yield a 1/4" gap.

c) The seam between the long piece and the corner piece is laced like a shoe. Leather lace is used in this application rather than the polyester lace used elsewhere. Start from the bottom edge and lace towards the top.

4) CORNER - STANDARD OR SPORT BASKETS:

The leather on the Standard or Sport basket (some have been delivered with TuffStuff™) is installed without the corner piece. The side and end pieces simply butt together to form a seam at the corner.

a) Locate the third vertical upright from the aluminum "U" tube. This is where the butt-seam is always aligned.

b) Cut the end piece along the line created by the third upright.

c) Use the first cut as the pattern to cut the side piece. Cut this second piece approximately two inches at a time, leaving a 1/4" gap between the two leather pieces.

d) Punch holes and lace as you proceed. In order to avoid a pucker it will be necessary to widen the gap into an "hour glass" shape as you near the center of the curve.

e) End with an odd number of holes, usually 19 or 21, and finish lacing with a square knot. Leave a 1/4" to 3/8" tail.

7.4 TUFFSTUFF™ (PLASTIC COATING)

Some Standard or Sport basket bottom edges are coated with TuffStuff™, a polymer plastic material, in lieu of scuff leather. The plastic used for TuffStuff™ includes a polymer plastic and a catalyst. If this coating is damaged, contact Cameron Balloons US for repair information.

7.5 VERTICAL WICKER REPAIR

Broken vertical rattan pieces ("uprights") (one to two contiguous with three on each side of the broken ones unbroken) may be repaired and reinforced with 3/8" nylon rod (B040) (no other material is acceptable). The rod should extend six inches above and below the damaged area.

A) REPAIR WITH NYLON ROD:

1) Sharpen the rod slightly on one end to ease installation.
2) Spray the rod and the repair area with silicone lubricant.

3) Insert the rod 6 inches or more above the damaged area and drive the rod along the broken vertical member until it reaches the desired location and both ends are inside the weave.

If an excessive amount of vertical uprights (more than two contiguous and less than three on each side of the broken ones unbroken) are damaged **or** the damage is done in such a way that reinforcement with nylon rod is not acceptable, such as at the basket bottom curve, belt holes and step holes, vertical uprights **MUST** be removed and replaced.

B) REPAIR BY REPLACMENT:

1) Remove the top bolster in the area above the damaged uprights.

2) Remove the stainless steel Bandit™ clamps as necessary.

3) Pull the vertical upright out with a vise grip type tool and hammer. This method is aided by the use of silicon spray lubricant.

4) Drive a new piece of the correct size rattan in place, this method is aided by the use of silicone spray.

5) Install NEW Bandit™ clamps. The Bandit™ installation tool is available for loan from Cameron Balloons U.S.

6) Replace the top bolster.

Baskets with serial numbers of 8800 and greater have additional large vertical uprights (18-20mm) at the tank belt locations. These tank supports are necessary for the added stress imposed by the 15 and 20 gallon fuel tanks. Because these pieces do not extend into the floor or top bolster, they may be removed by separating the rope and small weave and pulling with a vice grip type tool. The new upright is installed much the same as the nylon rod.

7.6 HORIZONTAL WEAVE REPAIR

Sections of horizontal weave may be replaced with rattan of a similar size.

Cameron Balloons US baskets are made primarily of a "natural" rattan (i.e. one that does **not** have its natural outer skin removed). Small quantities of stripped rattan ("round reed") are used for accenting stripes. The stripped rattan is easily dyed using common Rit™ dye. The stripped rattan is more brittle and is not as strong as the natural rattan (with natural cover) and should not replace the natural rattan in repair work.

Older English-made baskets have sections woven of willow rather than rattan. Willow has a distinct reddish color and tends to flatten when woven, especially around basket openings such as the steps and belt holes. As used in these baskets, the willow must be woven before it dries after harvesting, and there is no source of willow suitable for balloon baskets in the United States. It is acceptable to replace damaged willow weave with rattan of a similar size.

When replacing horizontal weave it is important that the new woven piece be at least 12" long, plus ends that are bent and tucked down into the weave to hold the piece in place. Pieces shorter than 12" will not span enough vertical members to remain properly positioned in use.

Beginning and ending a splice should be done in the same manner as the rest of the basket in question. In the Aristocrat style basket the ends of horizontal weave are turned down. In the Standard or Sport basket the ends are overlapped for two vertical upright lengths.

7.7 TOP BOLSTER PATCHING

Repairs may be made to the top bolster (suede, smooth leather or cordura) by cementing a patch with contact cement on the underside of the damaged area (Goodyear's Pliobond™ contact cement works especially well for this). In the case of a tear it should be possible to bring the edges together. The reinforcement piece placed under the bolster material should extend at least 1/2" beyond the damaged area in all directions.

Suede may be rejuvenated with the use of commercially available suede brushes and suede stones. It is our experience that dry cleaning solvents and soaps should be avoided as they remove the oil in the suede, discoloring and hardening it. Shoe polish, mink and neat's-foot oil type treatments work well on **smooth** leather. Cordura can be washed with a mild soap solution, rinsed with clear, hot water and allowed to dry before covering.

7.8 BENT AND BROKEN U-TUBE

U-tubes are nonstructural. Their design function is to support the flexi-pole which in turn supports the burner. Cracked or broken U-tubes may or may not have to be repaired as outlined in Section 7.8 A. The only procedures that **MUST** be taken are:

1) **Insure** that in **NO WAY** would this break or crack jepordize the safety of the occupants of the basket.

2) Remove any sharp edges from the break or crack by filing, grinding or removing the broken area totally.

A) BROKEN U-TUBES:

In the unlikely event of a basket U-tube breaking, it may be repaired. The repair requires unweaving a section of the basket around the break and internally sleeving and welding the broken tube.

1) Remove basket weave for approximately four inches on either side of the break.

2) Insert a close-fitting aluminum sleeve at the break point.

3) Weld the break using a welding technique appropriate to aluminum (Heliarc or MIG welding should be used).

4) Re-weave the area to original specifications.

It is also permissible to cut the crack or break out of the U-tube. This will leave an open gap in the U-tube. When this method is used, all edges of the remaining U-tube sections must be smoothed and in NO WAY be a harzard to the occupants.

B) BENT U-TUBES:

The U-tubes can become bent in very hard landings, especially if the landing point is on a corner of the basket. Unwanted bends can occur in two locations: a straight section of the "U" tube can become bent, or the corner bends can become bent to an angle of other than the correct 90 degrees (right angle).

1) BENDS IN STRAIGHT SECTIONS:

Repair bends in sections which should be straight (vertical side sections or horizontal bottom section) by using a small hydraulic jack as follows.

a) Lay a straight edge along the "U" tube locate the point of greatest bend.

b) Construct a steel cable with loops on each end (Nicopress sleeves or cable clamps are suitable for forming loops in the ends). The cable attaches to the U-tube and spans from one side of the bent area to the other. This will normally mean spanning the entire width of the basket side or bottom.

c) Place the jack against the "U" tube at the center of the bend and under the formed cable. Use shims to protect the rattan at the point where the jack contacts the basket and make sure that the cable passes squarely across the extended centerline of the jack's hydraulic cylinder (failing to do this the jacking force will cause the jack to twist out of position).

d) Pump the jack against the cable and the "U" tube, applying pressure in one direction at the bend and in the opposite direction at the ends of the cable. It is usually necessary to slightly over-bend the tube in the opposite direction of the original bend, since the aluminum tube will flex back slightly when the jacking pressure is released.

2) BENDS IN CORNERS:

To correct the angle of a "U" tube corner bend which has been bent **outward**, a length of strong non-stretch rope and a pry bar or piece of strong wood are useful.

a) Sight along the basket sides and ends to confirm that this is the situation. A carpenter's square against the floor and the outside of the basket is useful if the basket is resting on a flat floor.

b) Tie the rope through the weave and around the "U" tube near its top, run it diagonally to and around the corner bend of the "U" tube at the opposite side of the basket and securely tie the two ends of the rope to each other.

c) Place the pry bar or piece of wood between the two parts of the rope. Carefully twist the rope with the pry bar, thus shortening the rope and applying an inward bending force The top of the "U" tube will be drawn in toward the opposite side. It may be necessary to do this at both ends of the basket (both "U" tubes).

WARNING! DANGER!
Tremendous energy is stored in the twisted rope -- the rope and pry bar both must be very strong and you must be careful not to lose your grip on the pry bar. The pry bar may spin violently backwards and seriously injure you.

To correct the angle of a "U" tube corner bend which has been bent **inward** does not lend itself to the above technique. In this case, force must be applied at the same points as in the above case, except it must be applied in the opposite direction. Occasionally it is adequate for a person to brace their back against the inside top of the "U" tube which must be bent outward, place their feet at the inside of the corner bend on the opposite side of the basket, and push hard.

Failing this, a standard hydraulic jack can be rigged to apply the necessary force at these points. Note that the corner bend may need to be overcorrected in order to relax to the correct 90 degree angle when the force is removed.

7.9 REPLACEMENT OF BASKET CABLES

The stainless steel cable (B006) woven through the basket may be spliced or replaced. Replacement is the preferred repair.

CAUTION:
Before starting this process, contact Cameron Balloons US for information on swaging. The necessary tools **MUST** be borrowed from Cameron Balloons US on a loan basis and the proper parts purchased.

A) CABLE REPLACEMENT:

1) Remove the two wire rope clamps attached to the cable. These clamps are found in the floor.

2) Remove the stainless steel Bandit™ clamps at the "U" tube curves.

3) Cut off one end of the cable just below its thimble and swaged compression sleeve.

4) Weld a 24 foot length of new 6mm stainless steel cable (B006) end-to-end with the cable to be replaced.

5) Place heavy weight (sand bags etc.) inside the basket near the corner where the cable will be pulled from.

6) Pull the old cable with an overhead hoist or block and tackle, this in turn will pull the new cable, until the mid-point of the new cable is in the center of the basket floor.

7) Install new wire rope clamps around the cables and stainless steel Bandit™ clamps around the "U" tubes.

8) Install new vinyl cable covering

9) Cut, thimble and swage the cables to the correct length.

7.10 ROPE AT TOP AND BOTTOM OF BASKET

The rope used for the internal passenger handholds and external carrying handles is a 3/4" polypropylene which, for aesthetic reasons, has been colored and finished to have the appearance of natural Manila rope (B045).

The woven rope handles are constructed with three individual strands twisted together. The area between handles is comprised of two strands. The two strand weave runs completely around the basket and only in the actual handle is the third strand incorporated.

A) SPLICING THE TWO STRAND WEAVE:

1) Start at least two vertical uprights from the nearest handle, farther away from the break if possible. Allow six inches of extra rope at the start of the splice (this will later be fused to the existing rope).

2) Separate the coiled three strands into three separate pieces.

3) Use two strands to reconstruct the existing pattern of rope weave. This is best done with two people, one inside and one outside the basket, to facilitate feeding the rope back and forth into and out of the basket between the uprights and through the weave.

7.11 FORMING A HANDLE

A handle is formed by introducing the third strand of rope at the point where the handle extends from the basket wall.

A) FORMING A ROPE HANDLE:

1) Begin with the two rope weave on the inside of the basket so the melted splice is not visible from the outside. It is also preferable to start the weave behind a tank location.

2) The two strand weave rope will be joined by the third independent strand to form the handle. The two strands of the two strand rope weave exit the basket interior and are separated by the handle-edge upright.

3) The third strand is now introduced. Begin at a point approximately six inches from the end of the independent third rope strand.

4) Twist the independent third strand into the first two strands until the length needed for the handle is attained (in production this is 15 twists of three strand).

5) One of the original two strands enters the basket interior through the space between the second and third upright from the original handle starting point, while the second rope strand remains on the exterior..

6) The third rope strand should have a tail about six inches long remaining and "sticking up" after one of the original two rope strands have re-entered the basket. The two original rope strands will continue around the basket.

7) The two 6 inch end pieces of the third rope strand can now be woven in and out of the uprights between the new handle ends to fill that area.

a) Stretch loosely the 6 inch piece of the third rope strand protruding from the handle starting point upright, along the inside of the basket to the handle ending point upright. Twist the rope handle at the ending point in such a fashion as to loosen the rope around the upright. Insert the remainder of the 6 inch piece of the third strand down and through the hole made from twisting the handle and adjacent to the upright.

b) Guide the 6 inch piece of the third rope strand protruding from the ending point upright between the ending point upright and its inner adjacent handle upright, on top of, behind and under the other third strand of rope. Apply a gentle sawing motion to center the intersection between the two uprights. Use care to prevent the rope from untwisting while cinching up the two strands.

c) Repeat step (b) for the two remaining gaps between the handle end points.

d) Twist the rope handle at original beginning point in such a fashion as to loosen the rope around the upright. Insert the remainder of the 6 inch piece of the third strand down and through the hole made from twisting the handle and adjacent to the upright.

The difference between original handle construction and repair construction is the manner in which the third strand ends are tucked into the basket. The third strand ends of the original handle ends are guided up and taped to the wicker uprights at the ends of the handles. For repairs, the ends are tucked into the adjacent two-strand weave and the ends are melted into place to prevent dislocation or fraying.

7.12 ALLOWABLE DAMAGE

GENERAL:

The following specific conditions do NOT make the balloon un-airworthy. Although operation of the balloon is allowed, it is best to repair these conditions at the earliest convenient opportunity, preferably no later than the time of the next Annual/100-hour inspection.

Consult Cameron Balloons if questions arise on the airworthiness or legality of a repair, installation or equipment damage.

A) SKIDS (WOVEN FLOOR ONLY):

A single basket skid may be cracked: (1) if all parts of the crack are within 1/2" from an outside surface **and,** on an inside basket skid, no sharp point is created by the crack where an occupant could come into contact with it or (2) if the crack does not extend lengthwise from the end of the skid to one of the endmost skid bolts.

B) BOTTOM SCUFF LEATHER:

Outside bottom edge scuff leather damage is permitted regardless of extent.

C) TOP BOLSTER:

Top bolster damage is permitted as long as the protective closed cell foam on the basket top edge remains firmly held in place.

D) FLOOR WEAVE:

Heavy floor weave and weave on the bottom curve can be abraded, but no more than one quarter of the thickness of the rattan can be missing.

E) UPRIGHTS:

One or two contiguous uprights may be broken (one break per upright), provided the next three uprights on both sides are not broken. The broken uprights **MUST** be repaired or replaced at the next annual/100 Hour Inspection. Broken uprights at the edge or directly below the step hole and uprights at the belt holes or belt pass throughs **MUST** be repaired before further operation.

F) BELT HOLE UPRIGHTS:

If an upright on which the tank belts bear is broken at any point, the upright **MUST** be repaired. If an upright directly adjacent to a belt hole is broken, it **MUST** be repaired.

G) HORIZONTAL WEAVE:

Broken horizontal weave which does not permit an object larger than 3/4 inch in diameter to pass through the broken section is permitted.

H) BASKET SUSPENSION CABLES:

Basket suspension cables are made up of 6mm stainless steel 6x19 wire. Up to 38 total individual wire strands may be broken in the thimble area (beyond the ferrule) on any single suspension cable. Up to 19 total individual wire strands may be broken on one single basket suspension cable in any location other than the thimble area.

Damaged wire strands in the thimble area should be trimmed of any sharp protruding ends and the area covered with an epoxy cement to protect against the danger of snagging persons or other parts of the balloon. Damaged wire strands in other areas of the cable should be covered with heat shrink tubing or several layers of electrical tape to afford the same protection.

I) SUSPENSION CABLE PLASTIC TUBING COVER:

Un-repaired damage is not permitted. If damaged, the damaged section of the protective vinyl basket cable covering must be wrapped with at least 1/16" thickness of **electrical** tape to at least 1" beyond the damaged area in each direction.

J) U-TUBES:

Any damage to the U-tubes is permitted as long as the damage could not injure an occupant of the basket.

K) PARTITIONED BASKET TOP FRAME & VERTICAL METAL INFRASTRUCTURE:

Slight to moderate bends are permitted to the top frame & vertical metal infrastructure as long as all bends are smooth and there are no cracks, creases or kinks present.

Cracked or broken metal, nylon or rattan infrastructure that could injure basket occupants MUST be repaired before the next flight.

L) SPORT BASKET TOGGLE HANDLES:

Wooden Toggle Handles may be **REPLACED** by the owner/operator with genuine Cameron Balloons supplied toggles.

APPENDIX 4 – BURNER AND FUEL SYSTEM MAINTENANCE AND REPAIR INSTRUCTIONS ("Section 6")

SECTION 6

BURNER AND FUEL SYSTEM

WARNING! DANGER!
HAZADOUS CONDITIONS WHICH COULD RESULT IN INJURY OR DEATH MAY OCCUR FROM: **A. THE INSTALLATION OF NON-APPROVED PARTS OR MATERIALS** **B. MODIFICATION OF ANY PART** **C. IMPROPER REPAIR PROCEDURES** **D. IMPROPER OPERATION OF THIS AIRCRAFT** **APPROVED REPLACEMENT PARTS, MATERIALS AND REPAIR PROCEDURES ARE DOCUMENTED IN THIS MANUAL**

The MK III double burner (Cameron drawing no. CB205) consists of welded coils into which a stainless steel tee fitting is screwed. The tee fitting joins the pre-heat coil to the blast valves and pressure gauge. Each blast valve connects the tee fitting to a liquid fuel hose. Each liquid fuel hose connects its blast valve to a fuel manifold or fuel tank via steel-reinforced hose and a hose end connector.

The MK IV Standard single burner (Cameron drawing no. CB391 or CBUS391), MK IV Standard double burner (Cameron drawing no. CB392 or CBUS392), MK IV Super double burner (Cameron drawing no. CB579-1 or CB579-2 or CBUS579-1 or CBUS579-2), MK IV Ultra single burner (Cameron drawing no. CB2130-1 or CB2130-2), MK IV Ultra double burner (Cameron drawing no. CB2075-1 or CB2075-2), MK IV Ultra triple burner (Cameron drawing no. CB2081-1 or CB2081-2) and MK IV Ultra quadruple burner (Cameron drawing no. CB2083-1 or CB2083-2) use Inconel coils with corner straps that hold the coils firmly but allow movement of the coils within the corner brackets.

The MK IV Standard burners use a steel tee fitting similar to that used on the MK III double burner. The tee fitting(s) joins the pre-heat coil(s) to the blast valves and pressure gauge(s). A Whisper™ Valve is attached to the blast valve. The blast valves connect the pre-heat coil(s) to the fuel tank or basket fuel manifold via a steel-reinforced hose and a hose end connector.

The MK IV Super burner coils and can are very similar to the MK IV Standard burner. The Cameron Manifold blocks replace the stainless steel tees and integrates the blast valve, pilot light on/off valve and piezoelectric ignitor in a single machined unit. A Whisper™ Valve is attached to the mainfold block. A lubrication port is incorporated into each blast valve. The Cameron Manifold block connects the burner coil to the fuel tank or basket fuel manifold via a steel-reinforced hose and a hose end connector.

The MK IV Ultra burners have similar coil and can assemblies as the MK IV Super burner (although the jets may be configured in a round rather than square pattern). The MK IV Ultras have the Whisper™ valve as an integral part of the Cameron Manifold block and the blast valve handles may be connected by the "Ultragrip" handle. The "Ultragrip" handle allows the blast valves to be operated via a trigger action. The blast valve handles may alternatively be rotated through 180° and operated in the traditional manner. Liquid pilot lights are standard, with vapor pilot lights available as an option. Each blast valve and Whisper™ valve has a provision for lubrication (recommended approx. each 20 hours of operation), as described in Sec. 6.9.

See Appendix G for the Sirocco burners.

PARTS ARE NOT INTERCHANGEABLE

CAUTION:
WHERE PART NUMBERS ARE GIVEN FOR FUEL SYSTEM FITTINGS SPECIFYING BRITISH REGO, THE AMERICAN REGO FITTING IS NEITHER EQUIVALENT NOR PERMITTED, EVEN IF THE FITTING HAS THE SAME NUMBER. BRITISH AND AMERICAN REGO PARTS ARE IN THESE INSTANCES NOT INTERCHANGEABLE. IF THE DESCRIPTION STATES ONLY "REGO" THEN EITHER THE BRITISH REGO FITTING OR THE U.S. REGO FITTING MAY BE USED.

6.1 BURNER SYSTEM: MAJOR PARTS AND SUBASSEMBLIES

BURNER COIL, MK III double burner: (Cameron Balloons U.S. Drawing no. CB201) The stainless steel coil is constructed of 16 SWG stainless steel tubing.

BURNER COIL, MK IV STANDARD burner (Cameron Balloons U.S. Drawing no. CB371) The coil is Inconel high-temperature stainless alloy with corner brackets.

BURNER COIL, MK IV SUPER burner: (Cameron Balloons U.S. Drawing no. CB584) The coil is Inconel high-temperature stainless alloy with corner brackets. The jets may be configured in either a square or circular pattern.

BURNER COIL, MK IV ULTRA burner: (double, triple and quadruple burners - Cameron Balloons U.S. Drawing no. CB2076) (single burner - Cameron Balloons U.S. Drawing no. CB2132). The coil is Inconel high temperature stainless alloy with corner brackets. The jets may be configured in either a square or circular pattern.

THREE-WAY TEE FITTING: (F057) For use on MK III double burners. This part is designed and custom fabricated for this purpose. Replacement fittings must be obtained from Cameron Balloons U.S. NO OTHER FITTING IS APPROVED.

FOUR-WAY TEE FITTING: (F059) For use on MK IV Standard single and double burners. This part is designed and custom fabricated for this purpose. Replacement fittings must be obtained from Cameron Balloons U.S. NO OTHER FITTING IS APPROVED.

LIQUID HOSE: Hose assemblies **MUST** be obtained from Cameron Balloons. Specify which burner and basket the hose will be used with, so the proper length can be provided. For older systems, be ready to provide the overall length of the fuel hose needed, as this may be necessary (It is a good idea even on newer systems to provide the overall length of the hose being replaced, since this is a good cross-check that you are really ordering what you need).

NOTE:
FUEL HOSES MUST BE REPLACED AFTER 10 YEARS IN SERVICE.
Cameron Balloons U.S. requires liquid, vapor and manifold hoses to be replaced if they have been in service for 10 years or are damaged. If the outer rubber cover is cut, cracked or sliced enough to expose the inner steel braid, the hose **MUST** be replaced at the next 100/Annual Insp.

VAPOR HOSE: Hose assembly **MUST** be obtained from Cameron Balloons. As above, it is a good idea to measure the overall length of the hose being replaced and to provide this measurement when ordering a replacement hose as a cross-check that you are really ordering what you need.

FUEL PRESSURE GAUGE: Pressure gauges are custom made specifically for Cameron Balloons. There are several versions depending on the specific burner. No other gauge is approved. Other than lens replacement, damaged gauges **MUST** be replaced.

BLAST VALVE: (F128 or F901) American REGO 7553S or 7553T or 7901T quick-acting valve.

HOSE END FITTING: (F006S) (REGO 7141F or BMV 344) are BRITISH 1 1/4" Female ACME fitting, (F06) is assembled by Cameron U.S. and is also a BRITISH 1 1/4" Female ACME fitting or (F075) TEMA 3800 coupler.

WHISPER VALVE: Three different whisper valve styles have been used. The first, installed on early MK IV Standard burners, is a "Nupro" (F181) stem and seat valve, which is screwed into the side of a modified blast valve and is activated by turning a green or red knob. The second, installed on later MK IV Standard burners and all MK IV Super burners, is a modified "Waverly" (F180W or F740) ball valve which was either screwed into the side of a modified blast valve (MK IV Standard) or screwed into the Cameron Manifold block (MK IV Super) and activated by turning a blue plastic covered handle. The third is a specifically designed valve, which is incorporated into all MK IV Ultra & Sirocco burner manifold blocks and activated by turning a blue anodized handle.

PILOT LIGHT ON/OFF VALVE: Two different vapor pilot light valve styles have been used. The first, installed on all MK IV Standard burners, is a "Waverly" (F180) ball valve which is in line between the vapor hose and the pilot light cup and activated by turning a red plastic covered handle. The second is three specifically designed valves which are incorporated into the MK IV Super, Ultra & Sirocco burners manifold blocks and activated by turning a flat aluminum (Super) or round red anodized handle.

CROSS FLOW VALVE: Two different crossflow valve styles have been used. The first, installed on all MK IV Standard double burners, is a "Dynaquip" ball valve which is activated by turning a dull gray metal handle. The second, installed on all MK IV Super and MK IV Ultra Double, Triple and Quadruple burners is a "Waverly" ball valve which is activated by turning a yellow plastic covered handle.

LIQUID PILOT LIGHT REGULATOR: Two different liquid pilot light regulators are used. The MK IV Super burner uses a specifically designed manually adjustable needle and seat valve regulator which is externally mounted to the Cameron manifold block, (the same position where the vapor hose is installed on vapor fed pilot light burners). All MK IV Ultra & Sirocco burners use a specifically designed piston and seat non-adjustable regulator which is mounted inside the burner can between the Cameron manifold block and pilot light torch body.

BURNER FRAME: Many frames have been used. The styles and configurations vary depending on the burner and basket sizes.

BURNER FRAME CORNER SHACKLE: Loop shackle at burner corner is AGS-194E. The shackle pin is AGS-196E. The nut is 1/2 BSF Nyloc. The three pieces are Part no. F011.

BURNER GIMBAL BOLT ASSEMBLY BETWEEN INNER FRAME AND BURNER UNIT: 8mm x 40 (F309) or 45 (F309M) or 50mm (F309L) stainless steel bolt, with or without a brass or fiber (F053) friction washer, saddle block (F056), curved washer (F304), thin locking nut (F306) and a cap nut (F305).

BURNER GIMBAL BOLT ASSEMBLY BETWEEN INNER AND OUTER FRAME: 8mm x 65mm (F307) (10mm on T & TT frames) stainless steel bolt, a curved washer (F304), a fiber washer (F053) sandwiched between two brass saddles (F056), a curved washer (F304), thin lock nut (F306) and hex nut (F310).

CARABINER: Stubai 982002 (B111)

BURNER JET SCREW: (MK III) Drilled screw size OBA (F342)

MAIN BURNER JET: (ALL MK IV's) Amal Size 1020 (F00XJ) is standard on all MK IV's except the MK IV Ultra single. Various other sizes are used for special applications. Multi-hole jet (F923) is standard on MK IV Ultra singles and as an option on all other MK IV's.

WHISPER JET (removable models): (ALL MK IV) Amal Size 2640 (F182) or Multi hole "Quiet" jet (F922 or F924)

6.2 REQUIRED MAINTENANCE - MK III BURNERS

1) Tighten burner jet screws with a flat blade screw driver. These jets rarely loosen.

2) The Rego blast valve must be rebuilt (refer to Section 6.17) during each annual and 100 hour inspection.

6.3 REQUIRED MAINTENANCE - MK IV STANDARD BURNERS

1) The burner jets must be checked with a torque wrench to 60-100 **pound-inches**. Over-torquing can break the jets.

   If star washers are not present, you may optionally install the washers before tightening. Star washers are not required, but if a jet is found to be missing during the inspection, it may be wise to install star washers on all jets.

2) The Rego blast valve must be serviced during each annual and 100 hour inspection (refer to Section 6.17).

6.4 REQUIRED MAINTENANCE - MK IV SUPER BURNER

1) The burner main jets must be checked with a torque wrench to 60-100 **pound-inches**. Over-torqueing can break the jets.

   If the jet, star or crush washers are not present, you may optionally install the washers. Washers are not required, but, if a jet is found to be missing during the inspection, it may be wise to install lock washers on all jets.

2) "O" ring **replacement** is not a required Annual/100 Hour inspection procedure on the MK IV Super burners, but the blast valve must be disassembled (refer to Section 6.18), all internal parts of the valve cleaned and inspected and the two valve stem "O" rings lubricated with a silicone grease.

6.5 REQUIRED MAINTENANCE - MK IV ULTRA BURNERS

1) The burner main jets must be checked with a torque wrench to 60-100 **pound-inches**. Over-torqueing can break the jets.

If the jet star or crush washers are not present, you may optionally install the washers. Washers are not required, but, if a jet is found to be missing during the inspection, it may be wise to install lock washers on all jets.

2) Blast valve "O" ring **replacement** is not a required Annual/100 Hour inspection procedure on the MK IV Ultra burners, but the blast valve must be disassembled (refer to Section 6.19), all internal parts of the valve inspected and cleaned and the two valve stem "O" rings lubricated with a silicone grease.

3) The MK IV Ultra burners are equipped with a liquid fuel fed pilot light as standard equipment (vapor pilot optional). A fuel filter is located in the manifold block (refer to FIG. 6.19), remove and clean the pilot filter (refer to Section 6.25 I).

4) If fitted, disassemble and clean pilot light regulator (refer to Section 6.25 III)

5) Remove and clean the pilot light jet (vapor or liquid supplied system) (refer to Section 6.25 II).

6) Lubricate the whisper valves (refer to Section 6.9 B)

6.6 REPAIR OF BURNER COIL - ALL MODELS

The MK III burner coil may be repaired by welding in a new curved section of tubing. The burner **MUST** be pressure tested to 400 psi after welding. To accomplish this, the orifices must be replaced with undrilled OBA screws for the test. The coil must be submerged during the pressure test. Any small bubbles of gas escaping the burner indicate a flawed weld, which must be corrected before returning burner to service.

Contact Cameron Balloons US before undertaking any coil repair, as this would best be done by the factory.

The MK IV, MK IV Super, MK IV Ultra & Sirocco burner coil must be replaced with a Cameron Balloons US supplied coil assembly if damaged in such a way as to cause leakage of fuel or alteration of flame pattern.

6.7 FUEL HOSE REPLACEMENT - ALL MODELS – BURNERS & MANIFOLDS

Replacement may be completed by the owner/operator.

NOTE:
FUEL HOSES MUST BE REPLACED AFTER 10 YEARS IN SERVICE.
Cameron Balloons U.S. requires hoses to be replaced if they have been in service for 10 years or are damaged. If the outer rubber cover is cut, cracked or sliced enough to expose the inner steel braid the hose **MUST** be replaced.

Both liquid and vapor fuel hoses **MUST** be replaced using replacement hose assemblies supplied by Cameron Balloons US. The fuel hoses are removed and re-installed using simple open end wrenches.

NOTE:
During hose replacement, care should be taken to support the 7553T or 7901T Rego blast valve to prevent rotation or excessive side forces to the valve.

The threads on the fuel hose should be wrapped with two turns of Teflon tape. This is a steel to brass or aluminum connection and caution should be taken to not over-tighten these parts.

6.8 BURNER JETS - ALL MODELS

Replacement may be completed by owner/operator.

In all Cameron Balloons MK III Burners, pilot light jets and main burner jets are drilled British OBA screws. They are removed and replaced using a flat blade screwdriver. These jets are available from Cameron Balloons US.

The standard main burner jets in the MK IV, MK IV Super, and MK IV Ultra burners are AMAL screw-in brass jets. The standard size is 1020, although some early MK IV burners used size 1690. Various other sizes have been used in special applications. Some MK IV Standard, Super and Ultra burners have Cameron Balloons manufactured Multi-hole main jets similar to the Whisper™ jets. NOTE: The very earliest MK IV burners do not have removable jets. In these burners the jets consisted of holes drilled in the "S" coil assembly.

Removal and replacement of the AMAL jets should be done using a 5/16" Whitworth socket wrench (available from Cameron Balloons US)(multi-hole jets require a 9/16" SAE socket). Since the introduction of the MK IV burner, the AMAL jets have been installed with either Teflon tape, thread locking compound or several types of lock washers. An inside "Star" lock washer or copper crush washer is the current and recommended standard. These lock washers prevent loosening of the jets from any vibration, such as that incurred when transporting a balloon system. The star or crush washers are also better able to withstand overheating when the burners are operated on vapor.

When installing **new** jets and washers, torque them to **150 lb. inches. Always use a torque wrench and the recommended torque setting when installing new jets; otherwise you will either break them or not tighten them enough.**

6.9 BLAST VALVE AND WHISPER VALVE LUBRICATION - OWNER/OPERATOR PERMITTED: MK IV SUPER & MK IV ULTRA

This routine lubrication **(NOT SUFFICIENT FOR THE BLAST VALVE AT ANNUAL/100 HOUR INSPECTION)** may be completed by owner/operator and is recommended every 20 hours of operation.

A) BLAST VALVE:

1) LUBRICATION:

a) The lubrication port on the side of the MK IV Super (refer to FIG. 6.18) and MK IV Ultra (refer to FIGS. 6.19 & 6.19a) blast valves may be opened using a flat blade screwdriver. Silicone spray lubricant may then be introduced through this port directly to the O-rings on the valve stem. Use caution not to over-tighten the screw or lose the small O-ring around this screw as it seals this area against propane fuel leakage. **(This procedure is recommended every 20 hours of operation)**.

B) WHISPER VALVE:

1) LUBRICATION:

a) The Whisper valve on the MK IV Ultra burners (refer to FIG. 6.19 & 6.19a) may be lubricated by removing the 2.5mm Allen screw in the center of the valve stem. Silicon grease should be squeezed into the hole and the Allen screw replaced and tightened. The tightening of the Allen screw will force the grease into the space between the three O-rings on the valve stem. **(This procedure is recommended every 20 hours of operation)**.

At ANNUAL/100 HOUR INSPECTION the Blast valves must be disassembled, all internal parts cleaned, inspected and the two O-rings replaced and/or lubricated with a silicone grease which is compatible with propane fittings. (refer to Section 6.5 and 6.19)

6.10 DISASSEMBLY OF MK III BURNER

Refer to FIG. 6.10.

There is no stainless steel can on the MK III burner. The round coil connects directly to the 3 way Tee (F057), as does the blast valve (F128 Not Available, replace with F901) and fuel pressure gauge (F125). There is no piezo ignitor. The pilot light assembly and, if retrofitted, Whisper™ valve tube and jet each pass through the open bottom of the burner. Each of these is held to the burner in its own manner and common sense and experience will dictate which parts must be removed and in what order to effect a given repair.

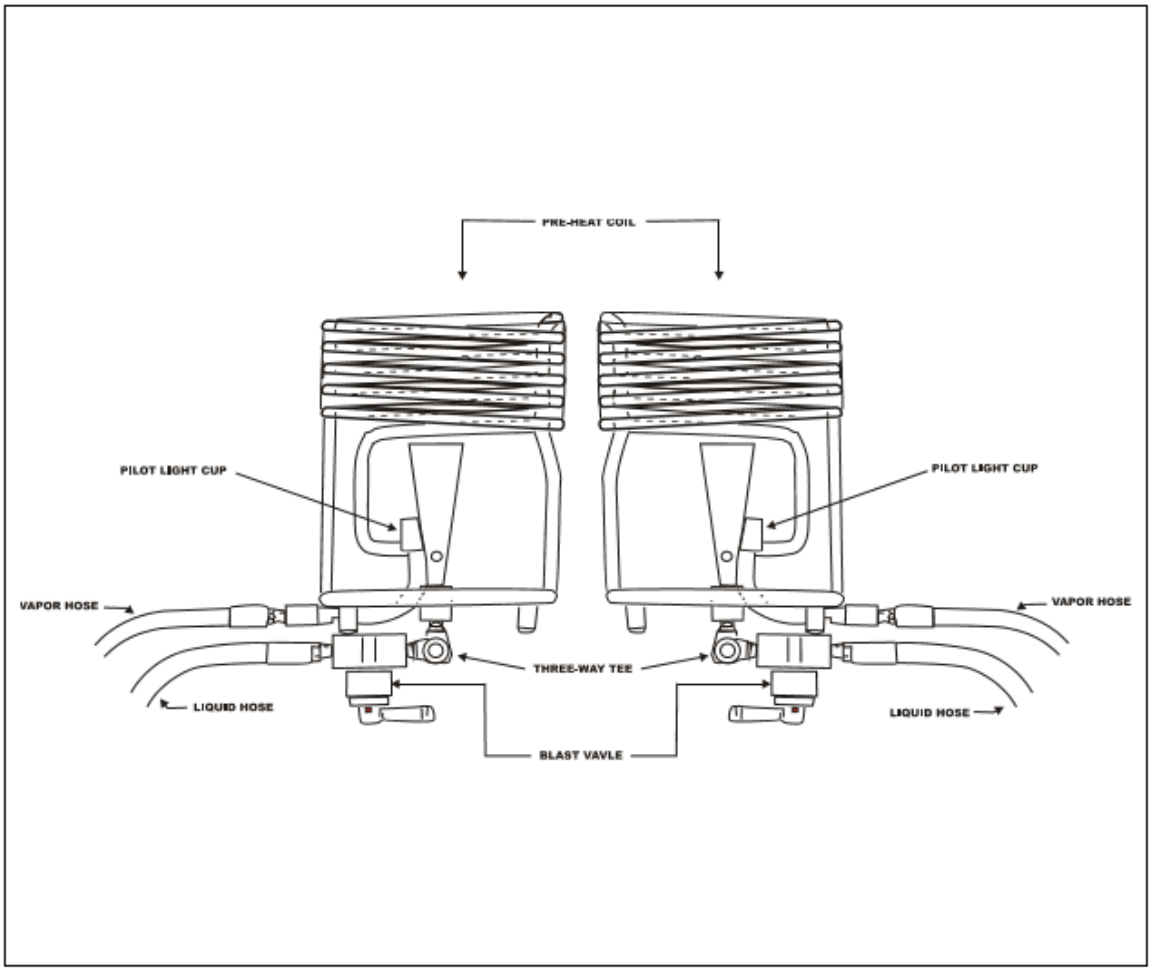

FIG. 6.10
MK III DOUBLE BURNER

6.11 DISASSEMBLY OF MK IV STANDARD BURNER

Refer to fig. 6.11 & 6.11a

The coil assembly is held in place by either 4 or 8 machine screws through the burner can and four corner coil support straps. The coil connects to the 4 way tee (F059) via a Swagelok fitting (use 7/8" crowfoot to remove) on the inside of the burner can. The piezo ignitor actuator (F153), pilot light assembly (F335) and Whisper™ valve tube (F182T), each pass through their own holes in the burner can (refer to FIG. 6.11 and 6.11a. Each of these is held to the can in its own manner and common sense and experience will dictate which parts must be removed and in what order to effect a given repair.

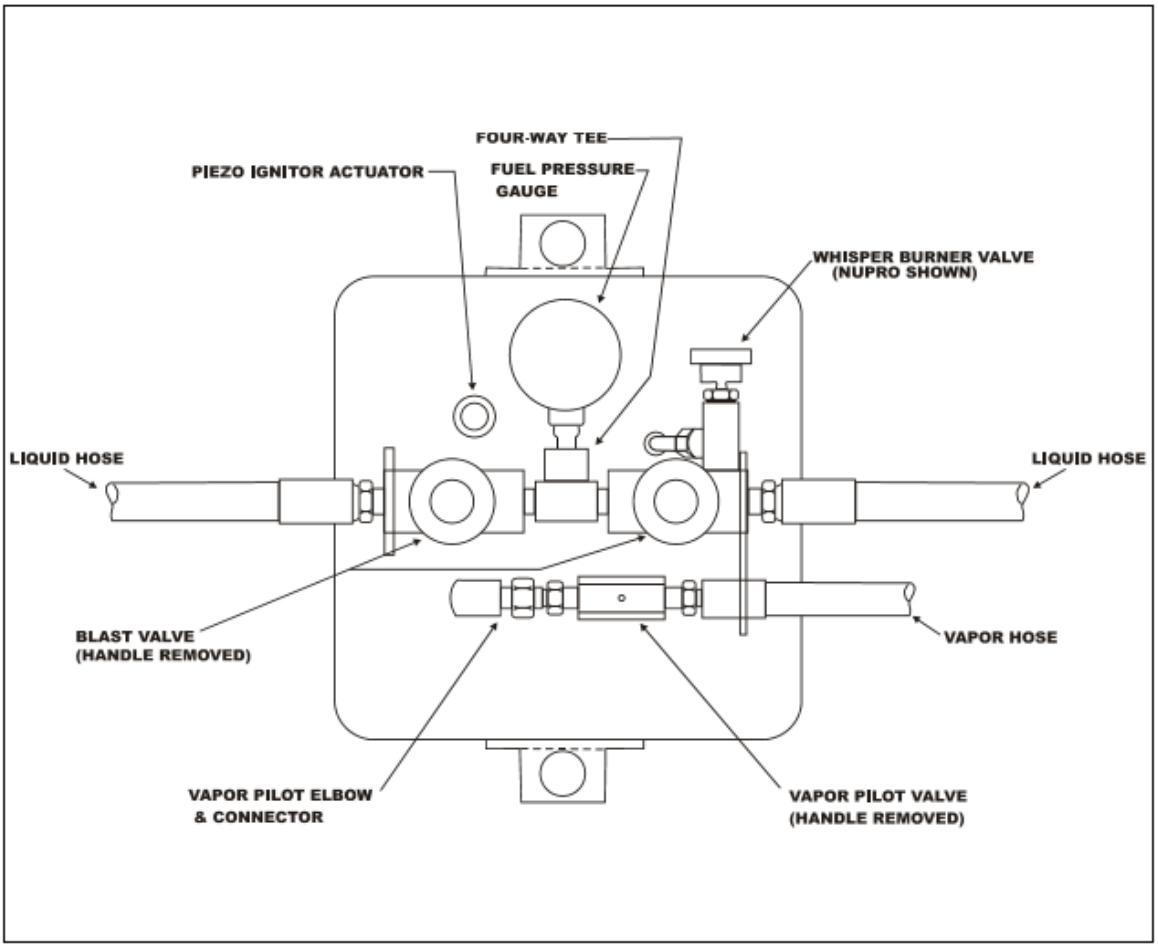

FIG. 6.11
MK IV STANDARD SINGLE BURNER

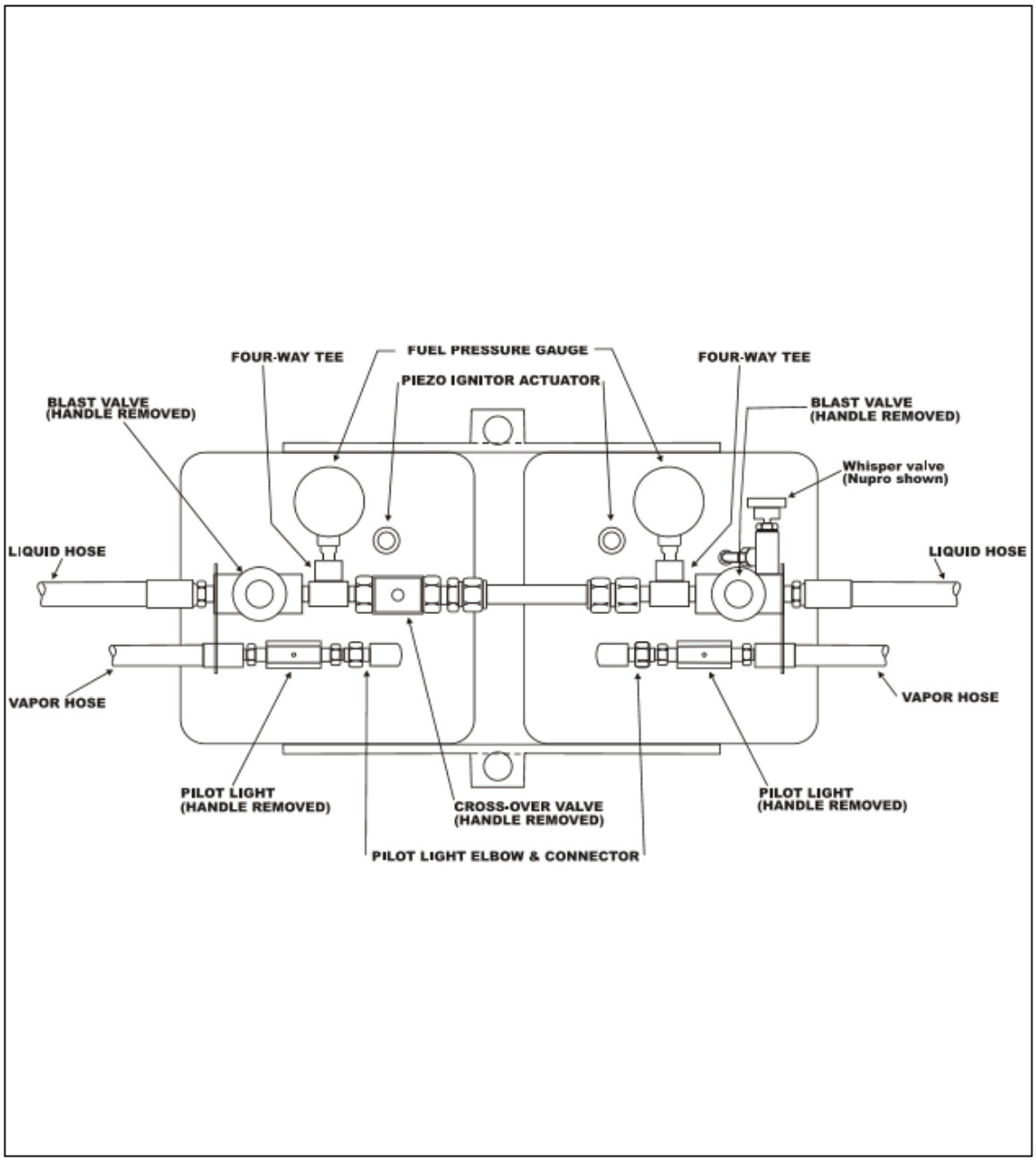

FIG. 6.11a
MK IV STANDARD DOUBLE BURNER

6.12 DISASSEMBLY OF MK IV SUPER BURNER

All systems, **except the fuel pressure gauge**, may be serviced without total disassembly of this burner.

A) COIL REMOVAL:

1) Remove the eight corner bracket screws (2 on each corner) with a straight blade screwdriver.

2) Remove the vent tube (refer to FIG. 6.18) with a flat blade screwdriver, to allow access to the Swagelok fitting.

3) Loosen completely the swagelok fitting (7/8" crowfoot) that connects the coil to the manifold block.

4) Pull the coil from the can to remove.

B) MANIFOLD REMOVAL:

Refer to FIG. 6.18

1) Remove the vent tube (flat blade screwdriver) to allow access to the Swagelok fitting.

2) Loosen completely the swagelok fitting (7/8" crowfoot) that connects the coil to the manifold block.

3) Loosen one side of the crossflow valve (refer to FIG. 6.12) by holding the crossflow valve securely with a 19mm wrench and completely loosen one swagelok fitting. (19mm wrench).

4) Each can is held to the handle by either 2 (very early models) or four bolts or screws. On each can, remove the inner most bolts (two on each side) and loosen the outer most bolts (two on each side).

5) Now each can unit may be pivoted to separate from each other at the crossflow valve.

6) Remove the pilot light cup by loosening the set screw (3mm hex wrench) (refer to FIG. 6.18 item F728).

7) Remove the Whisper™ valve jet and if present, the jet connector.

8) Remove three hex socket screws (5mm hex key) that hold the manifold to the burner can.

9) Remove the complete manifold assembly from its burner can. Take care not to damage the gasket that's between the manifold and burner can.

10) Assemble in reverse order.

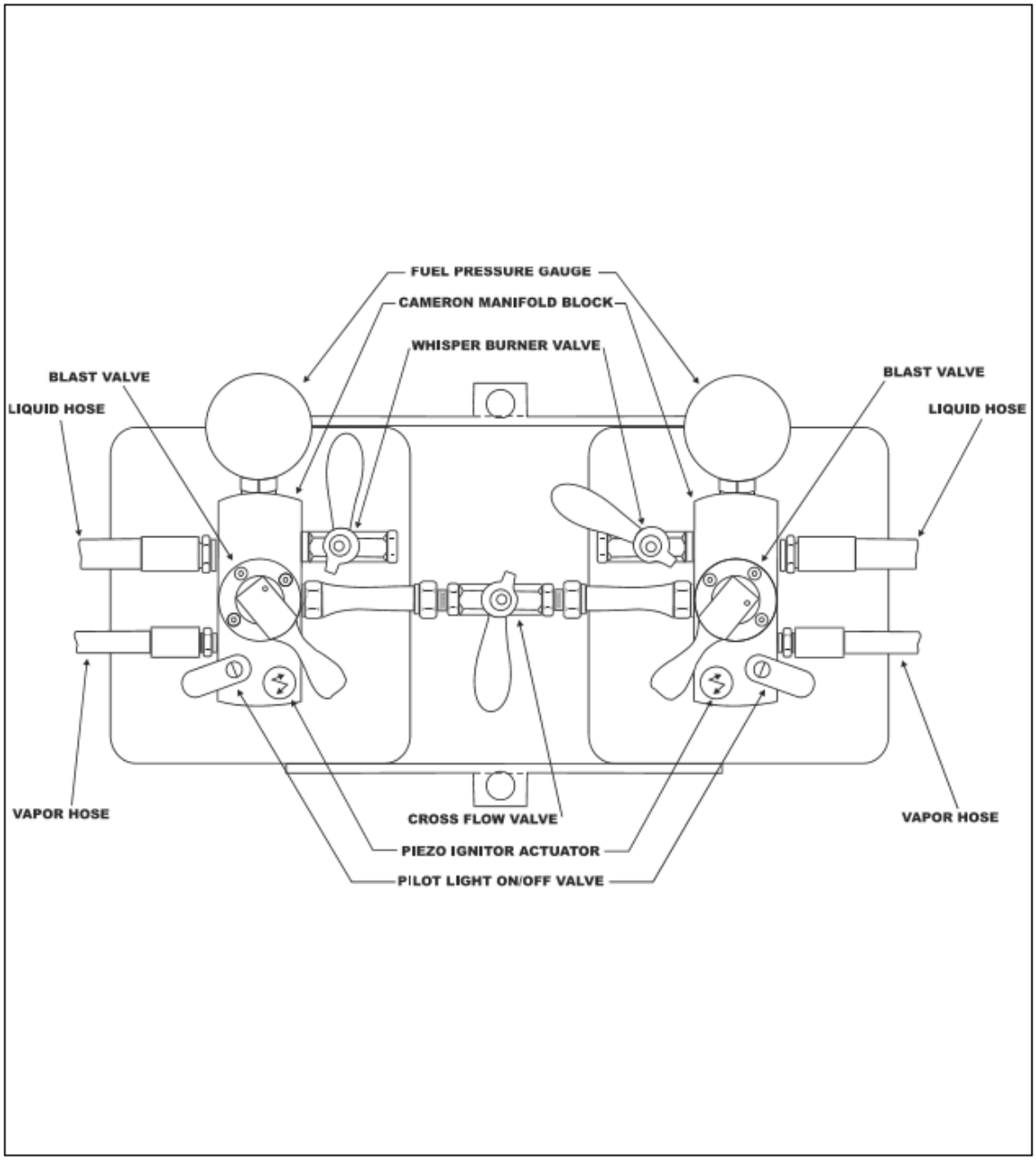

FIG. 6.12
MK IV SUPER BURNER

6.13 DISASSEMBLY OF MK IV ULTRA SINGLE BURNER

The MK IV Ultra Single burner is equipped with, as standard, a red and green anodized "Ultra Grip" Lever Action handle which spans the blast valves. Optionally available is an all green anodized "Ultra Grip" Squeeze Action handle. Refer to FIG. 6.13a.

All systems may be serviced without total disassembly of this burner.

A) COIL REMOVAL:

1) Refer to Section 6.12 A, except use FIG. 6.19a.

B) MANIFOLD REMOVAL:

Refer to FIG. 6.19a

1) Remove both vent tubes (flat blade screwdriver) to allow access to the Swagelok fitting.

2) Loosen completely the Swagelok fitting (7/8" crowfoot) that connects the coil to the manifold block.

3) Remove the five hex socket screws (5mm hex key) that attach the burner can to the manifold block.

4) The entire manifold block may now be separated from the burner can.

5) Assemble in reverse order.

C) ULTRA GRIP HANDLE REMOVABLE:

Refer to FIG. 6.19b

1) Break loose the lock ring on each blast valve assembly by inserting a drift of the appropriate size into a lock ring hole.

2) Place both blast valve handles in the vertical position (perpendicular to the red and green handle end caps).

3) Simultaneously unscrew the lock rings and lift the entire handle, handle end caps and lock rings off of the valve body.

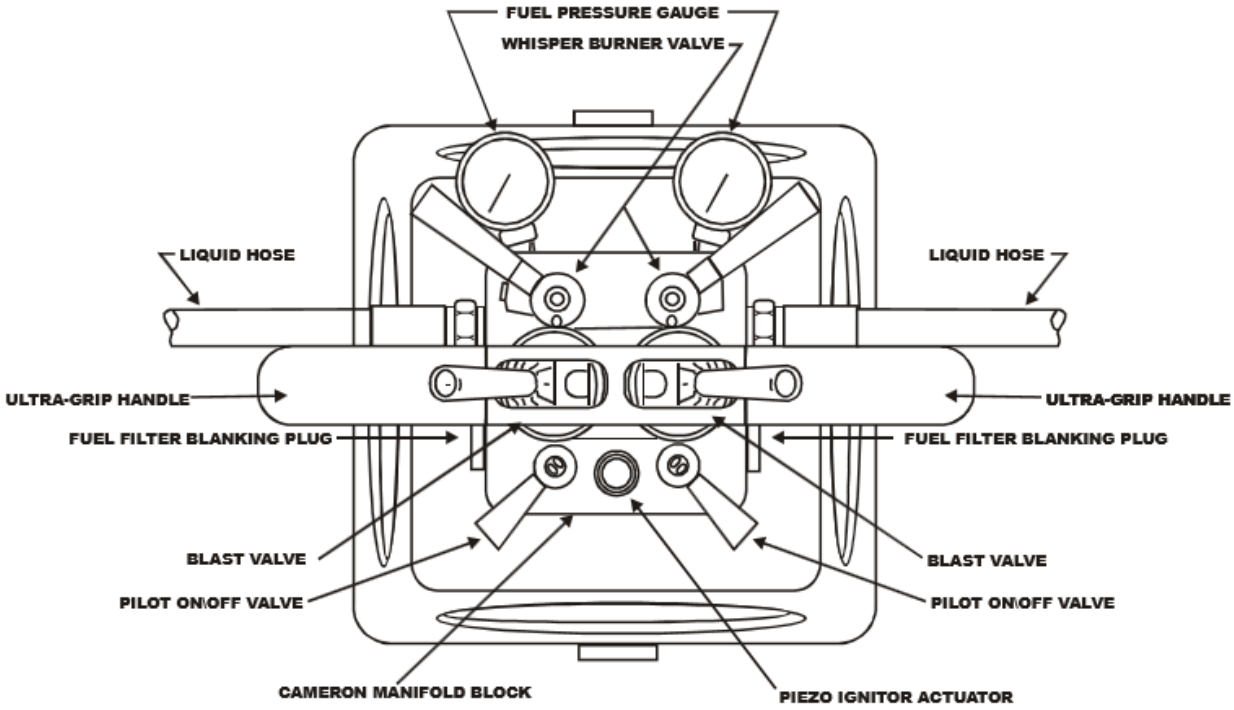

FIG. 6.13
MK IV ULTRA SINGLE BURNER

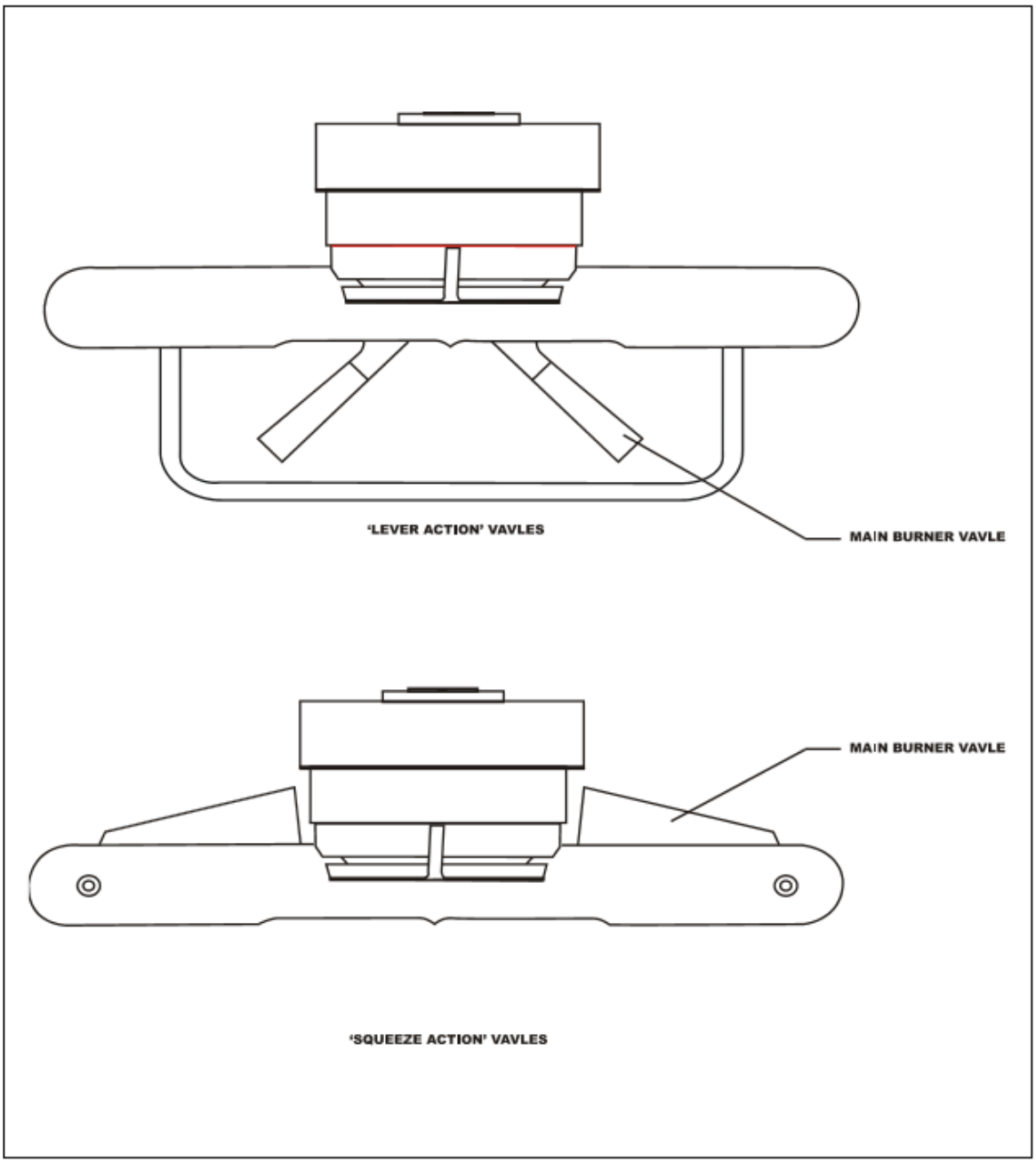

FIG. 6.13a
MK IV ULTRA SINGLE HANDLE CONFIGURATIONS

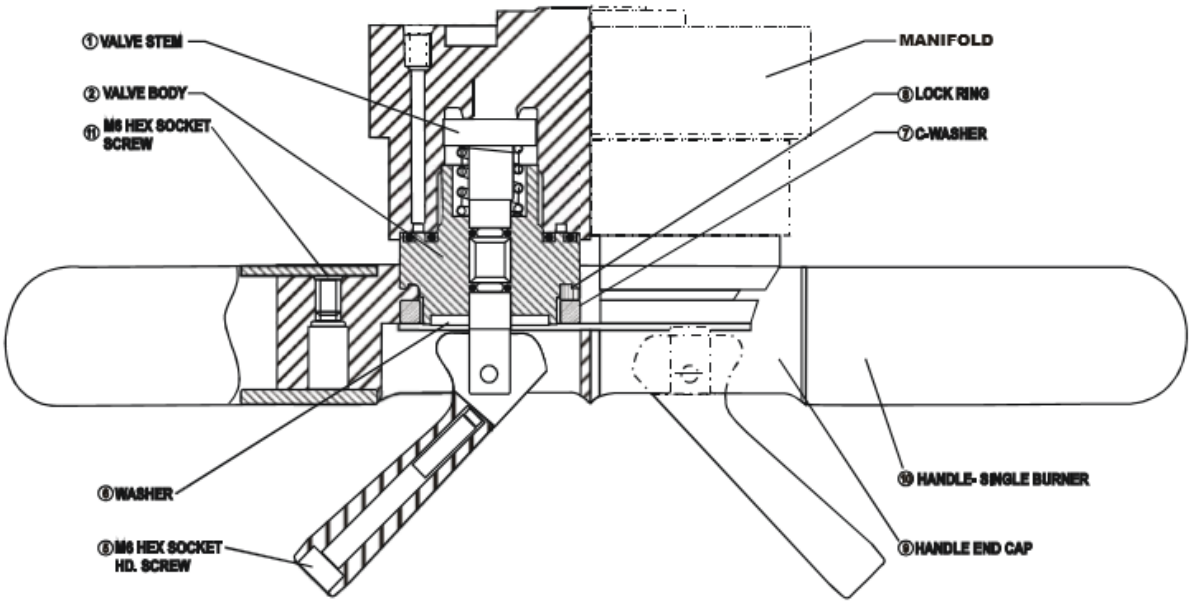

FIG. 6.13b
MK IV ULTRA SINGLE BLAST VALVE

6.14 DISASSEMBLY OF MK IV ULTRA DOUBLE BURNER

The MK IV Ultra double burner is equipped with, as standard, a red anodized "Ultra Grip" handle which spans the blast valves. Optionally available is a blast valve configuration similar in appearance to the MK IV Super burner. (refer to FIG. 6.19b)

All systems may be serviced without total disassembly of this burner.

A) COIL REMOVAL:

1) Refer to Section 6.12 A, except use FIG. 6.19.

B) ULTRA GRIP HANDLE REMOVAL:

Refer to FIG. 6.19

1) Loosen both hex socket set screws (Ultra tool or 3mm hex key) which are accessed through the holes in the Ultra Grip handle.

2) Break loose the lock ring (refer to FIG. 6.19b) on each blast valve assembly by inserting the Ultra tool spanner wrench pin into the corresponding lock ring hole. They should be snug, however, a tap with a rubber mallet on the Ultra tool may be necessary to loosen them.

3) Place both blast valve handles in the vertical position (perpendicular to the crossflow valve).

4) Simultaneously unscrew the lock rings and lift the entire handle, handle end caps and lock rings off of the valve body.

C) MANIFOLD REMOVAL:

1) Remove the vent tube (refer to FIG. 6.19) with a flat blade screwdriver to allow access to the coil Swagelok fitting.

2) Loosen completely the Swagelok fitting (7/8" crowfoot) that connects the coil to the manifold block.

3) Loosen one side of the crossflow valve by completely loosening one swagelok fitting (refer to FIG. 6.14).

4) Each can is held to the burner can strap by four bolts. On each can, remove the inner most bolts (two on each side) and loosen the outer most bolts (two on each side).

5) Now each can unit may be pivoted to separate from each other at the crossflow valve.

6) Loosen completely the fuel pressure gauge feed tube at the manifold block end.

7) Remove the three hex socket screws (5mm hex key) that attach the burner can to the manifold block.

8) The entire manifold blocks may now be separated from the burner can.

9) Assemble in reverse order.

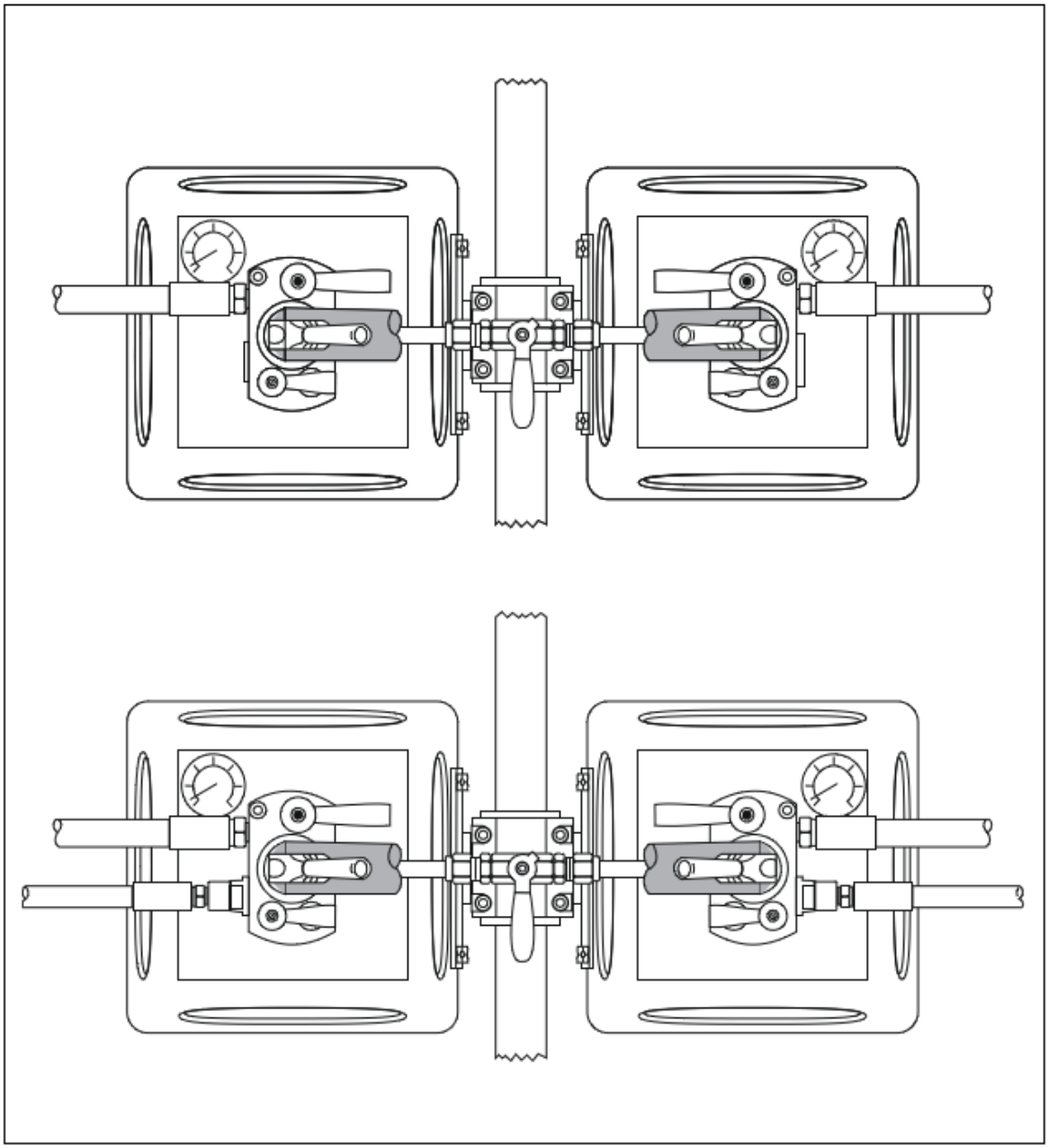

FIG. 6.14
MK IV ULTRA DOUBLE BURNER
LIQUID & VAPOR PILOT LIGHTS SHOWN
GIMBAL BLOCK FRAME SHOWN

6.15 DISASSEMBLY OF MK IV ULTRA TRIPLE BURNER

Refer to FIG. 6.15.

The MK IV Ultra triple burner is available in two configurations. The first is one Ultra double burner and 1/2 of a Ultra double burner with the Ultra-T Grip handle. The second configuration is an Ultra double burner without the Ultra Grip handle and 1/2 of a Ultra double burner without the Ultra Grip handle. For complete disassembly instructions refer to Section 6.14.

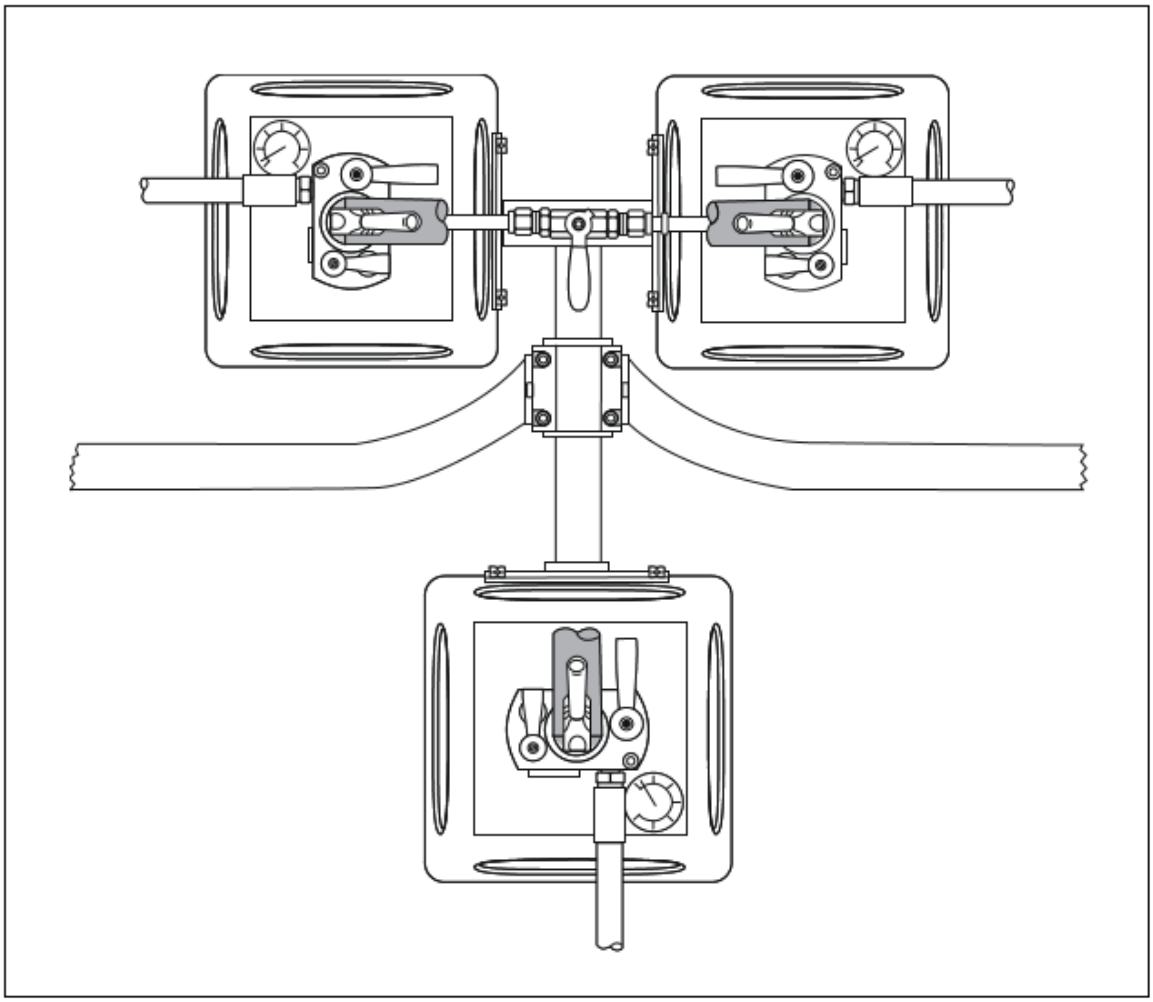

FIG. 6.15
MK IV ULTRA TRIPLE BURNER
GIMBAL BLOCK FRAME AND T-HANDLE SHOWN

6.16 DISASSEMBLY OF MK IV ULTRA QUADRUPLE BURNER

Refer to FIG. 6.16.

The MK IV Ultra Quadruple burner is available in two configurations. The first is two Ultra double burners with the Ultra-H Grip handle. The second configuration is two Ultra double burners without the Ultra Grip handle. For complete disassembly instructions refer to Sections 6.14.

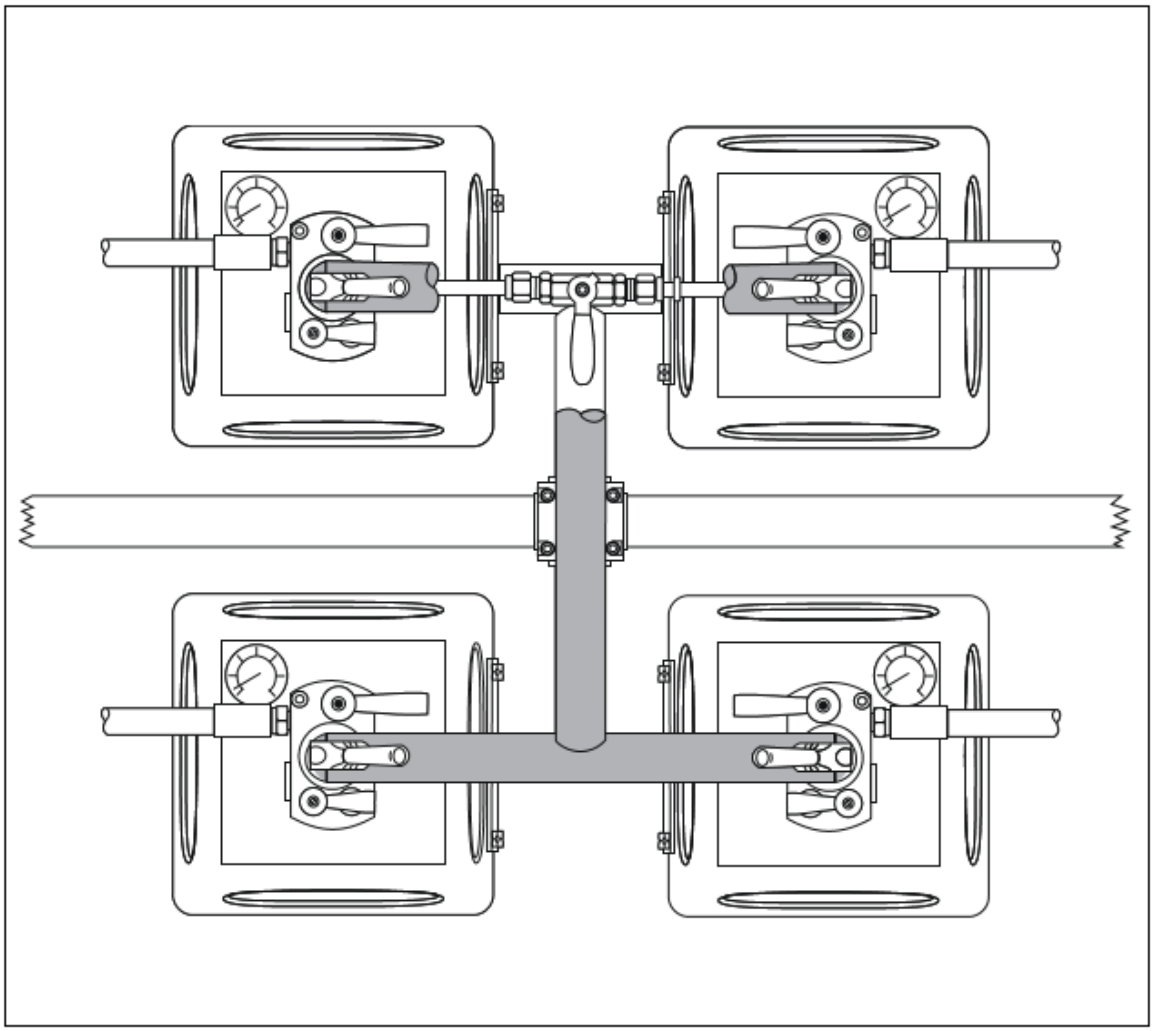

FIG. 6.16
MK IV ULTRA QUADRUPLE BURNER

6.17 BLAST VALVE DISASSEMBLY & MAINTENANCE - MK III & MK IV STANDARD BURNERS

The REGO 7901T valve (F901) is used on all current MK IV Standard single burners. The REGO 7553T (F128) or 7553S were used on all MK III & early MK IV Standard single and double burners. The complete 7553T & S valves are no longer available, however, internal replacement and rebuild parts are. The REGO blast valves, Rego part no. 7553T and 7901T, are illustrated in FIG. 6.17.

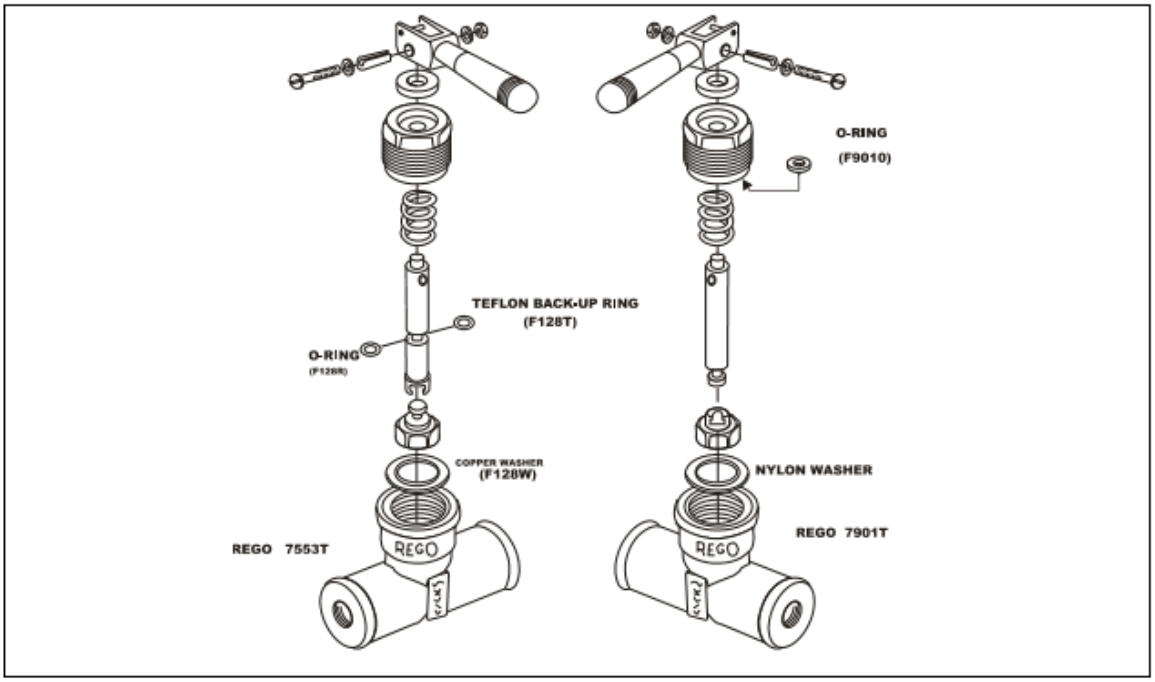

FIG. 6.17
REGO 7553T and 7901T BLAST VALVES

The 7553S valve is similar to the 7553T valve EXCEPT the 7553S valve does not incorporate the Teflon Backup Ring, the Seat Retainer Assembly is attached with a screw rather than a rivet, and the shaft is a single piece. The 7553T bonnet assembly (F128B) may be obtained from Cameron Balloons US and includes all parts except the blast valve body. The bonnet assembly will have had performed on it all the maintenance items specified below. The bonnet assembly for the 7553T may be installed in the body of the 7553S, but if this is done, the exterior marking of the blast valve should be altered to change the designation from "7553S" to "7553T".

When a NEW bonnet assembly is screwed into the valve body, the handle of the bonnet assembly **MUST** be in the locked open position.

A) MK III - PREPARATIONS BEFORE REBUILDING:

The tee fitting and blast valve assembly must first be removed from the coil.

1) First remove the fuel hoses by using common open end wrenches.

2) Remove the stainless steel support screw clamps from around the blast valves.

3) Unscrew the entire blast valve, pressure gauge and 3-way or 4-way tee fitting assembly from the burner coil.

4) This assembly of components can now be supported by the blast valve body in a vise for further disassembly and/or rebuilding of the blast valves.

B) MK IV STANDARD - PREPARATIONS BEFORE REBUILDING:

Rebuilding of the Rego blast valve may be accomplished without removal of the valve from the burner, in part due to the support brackets at either side of the burner cans. **THE VALVE BODY MUST BE SUPPORTED WITH A LOCKING CHAIN WRENCH TO PREVENT UNDUE TORQUE AND STRESS ON THE 4-WAY TEE FITTING.**

1) Attach a chain wrench in a way which transfers the torque of valve assembly or disassembly to the stainless steel burner handle located between the valves. This will prevent damage to the very expensive, custom machined tee fitting (F059).

C) DISASSEMBLY, INSPECTION AND MAINTENANCE:

1) Remove the safety wire or machine screw from the blast valve handle. Remove the roll pin from the handle. Remove the handle.

CAUTION
BEFORE UNSCREWING THE BONNET ASSEMBLY, REMOVE ANY SHARP EDGES AROUND THE HOLE IN THE VALVE STEM WITH FINE EMERY CLOTH OR A ROUND FILE TO PREVENT SCORING OF THE BONNET.

When the bonnet is removed, a sharp edge or dirt on the valve stem can score the inside of the bonnet, destroying the bonnet.

2) (NOTE: see Section 6.17 B 1) Use a 1 1/4" (7553T) or 1 1/16" (7901T) box or socket wrench on the hex section of the bonnet, remove the bonnet assembly.

3) Inspect the inside of the blast valve body. Look particularly for hairline cracks in the body, scoring or debris in the seat area. If abrasive residue is found, it may indicate contaminated fuel, and may require that all tanks be purged and cleaned to remove damaging material from the fuel system.

4) Remove the **CLEANED** valve stem form the bonnet.

5) Inspect the interior walls of the bonnet, looking for scoring or abrasion marks. Clean the interior walls of the bonnet with a clean soft cloth and inspect for roundness. Inspect the stem. It must be unbent, and must not have any flat spots or scoring. The roll pin hole must be free from sharp edges.

6) Check the retainer rivet or screw in the base of the seat retainer assembly.

7) In the 7553T valve remove the "O" ring and Teflon backup ring from the valve stem. In the 7901T valve remove the "O" ring (there is no Teflon ring in the 7901T valve) from the bonnet. Clean the stem and bonnet, and lubricate with silicone or fluorinated grease or a petroleum grease commonly used for propane fitting lubrication.

8) In the 7553T valve manually install a new "O" ring (F128R) and Teflon backup ring (F128T) on the valve stem (Teflon ring nearest roll pin hole in stem). Do not use any tools to move the "O" ring over the stem as the "O" ring is soft and may be damaged. In the 7901T valve manually install a new "O" ring (F901) in the bonnet.

9) After the "O" ring and Teflon backup ring (7553T) or "O" ring only (7901T), are installed, lubricate the stem and bonnet again.

10) If servicing the 7553S valve, the Teflon backup ring will not be present and the screw in the base of the seat retainer should be checked for tightness. If this screw can be turned, remove it, clean the threads and reinstall using a thread locking compound.

11) If servicing the 7553T valve, remove and inspect the copper gasket (F128W) and gasket seat area.

12) If rebuilding the 7901T valve, remove and inspect the nylon gasket and gasket seat area.

D) ASSEMBLY:

1) Insert the valve stem through the spring and then through the bonnet.

2) Install the copper or nylon gasket. It is normally not necessary to install a new copper or nylon gasket during each annual inspection.

3) (NOTE: for MK IV Standard burners see Section 6.17 B 1) Screw the bonnet assembly into the blast valve body. The bonnet assembly should be torqued to 115 **lb.-ft.** (If optional Teflon tape is used on the bonnet threads, torque to 80 **lb.-ft.**). Take extreme care to support the valve body while torquing the bonnet assembly.

4) Install the handle on the stem, insert the roll pin into the handle and safety wire or bolt the roll pin.

6.18 BLAST VALVE DISASSEMBLY & MAINTENANCE - MK IV SUPER BURNER

Refer to FIG. 6.18 & 6.18a

A) DISASSEMBLY:

1) Remove the outer hex socket set screw (1.5mm hex key) from the handle.

2) Loosen the inner hex socket set screw (1.5mm hex key) in the handle.

3) Remove the handle pivot pin by unscrewing it from the handle.

4) Ensure that there are no sharp edges at the pivot hole on the valve stem to mar the bonnet.

5) Remove the four hex socket bolts (4mm hex key) which secure the bonnet to the manifold.

6) Pull the main seal, valve stem and spring from the bonnet.

B) MAINTENANCE AND ASSEMBLY:

1) Clean all internal components in solvent.

2) Inspect the two valve stem "O" rings (F712). If either is damaged it must be replaced. Use no metal tools when installing the "O" rings as the tools may mar the valve stem.

3) Inspect the valve seat in the manifold block for damage.

4) Inspect all other internal components.

5) Ensure that the screw (F716) securing the rubber main seal (F714) is tight. If it is loose, remove it, apply thread locking compound to the screw threads and screw it back in.

6) Lubricate the valve stem "O" rings with a silicone or fluorinated grease.

7) Inspect and lightly lubricate the body junction "O" ring (F705) that seals the bonnet to manifold junction.

8) Inspect the lubrication screw "O" ring (F718) and lightly lubricate.

9) Assemble in reverse order.

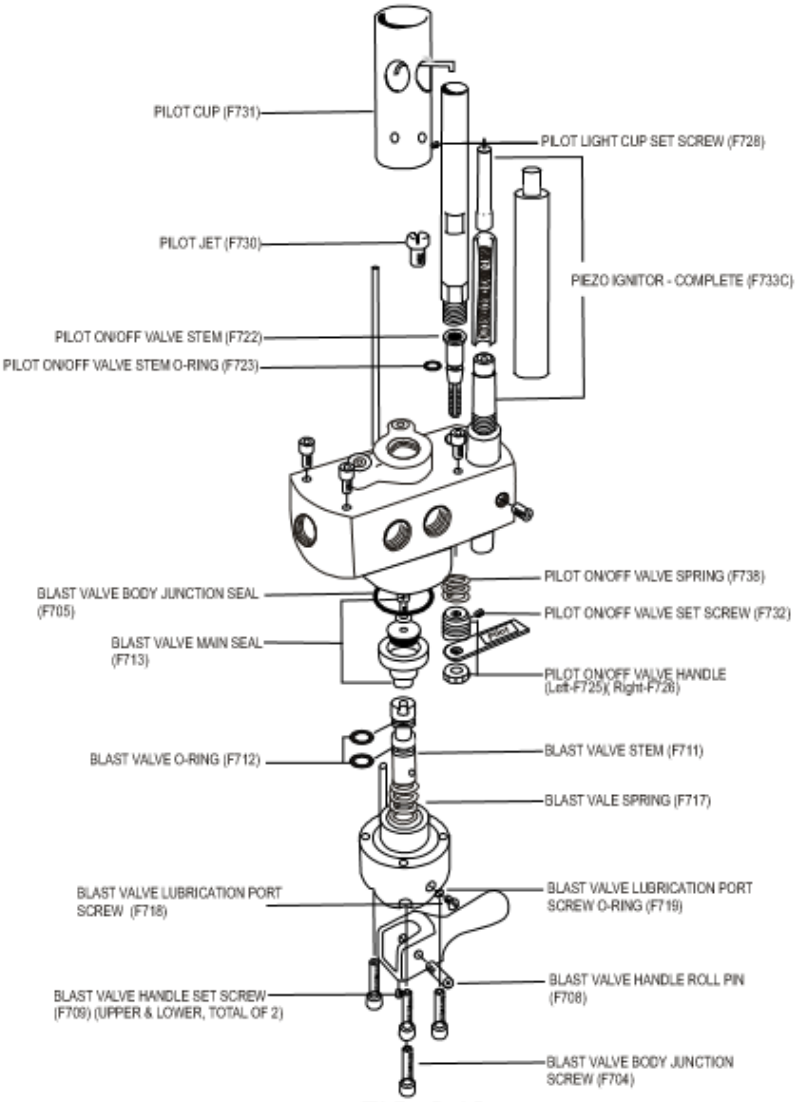

FIG. 6.18
MK IV SUPER MANIFOLD ASSEMBLY

6.19 BLAST VALVE DISASSEMBLY & MAINTENANCE - ALL MK IV ULTRA BURNERS

Refer to FIGs. 6.19, 6.19a & 6.19b

A) DISASSEMBLY:

1) Remove the Ultra Grip handle if present. (Single - Section 6.13 C, Double - Section 6.14 B, Triple - Section 6.15, Quadruple - Section 6.16)

2) Remove the blast valve handles:

   a) Ultra Grip handle: push out the handle pivot pins.

   b) Non Ultra grip handle: Refer to Section 6.18 A 1 through 4.

3) Break loose the blast valve bonnet assembly by inserting the Ultra tool C-spanner wrench pin into the corresponding blast valve bonnet hole. It should be snug, however, a tap with a rubber mallet on the Ultra tool will loosen it.

4) Unscrew the bonnet assembly and remove it from the manifold block.

5) Withdraw the valve stem and spring from the bonnet.

B) MAINTENANCE:

1) Clean all internal components in solvent.

2) Inspect the two valve stem "O" rings (F712). If either is damaged it must be replaced. Use no metal tools when installing the "O" rings as the tools may mar the valve stem.

3) Inspect the valve seat in the manifold block for damage and all other internal components.

4) Ensure that the screw (F716) securing the rubber main seal (F714) is tight. If it is loose, remove it, clean the threads and apply A suitable thread locking compound to the screw threads.

5) Lubricate the valve stem "O" rings with a silicone or fluorinated grease.

6) Inspect and lightly lubricate the bonnet junction "O" rings (inner F501 and outer F502) that seals the bonnet to manifold junction.

7) Inspect the lubrication screw "O" ring (F718) and lightly lubricate.

8) Assemble in reverse order.

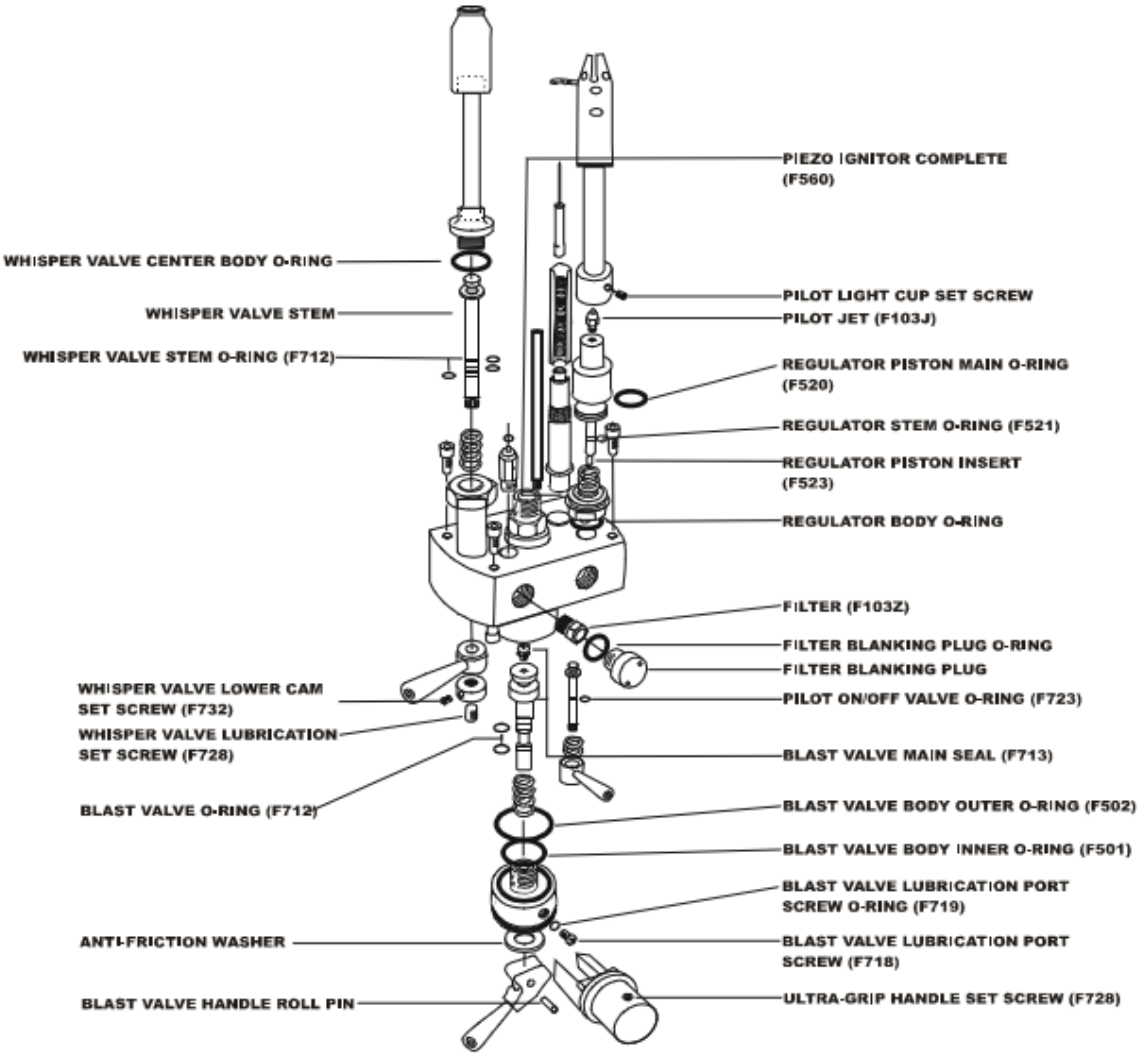

FIG. 6.19
MK IV ULTRA DOUBLE, TRIPLE & QUADRUPLE
MANIFOLD ASSEMBLY

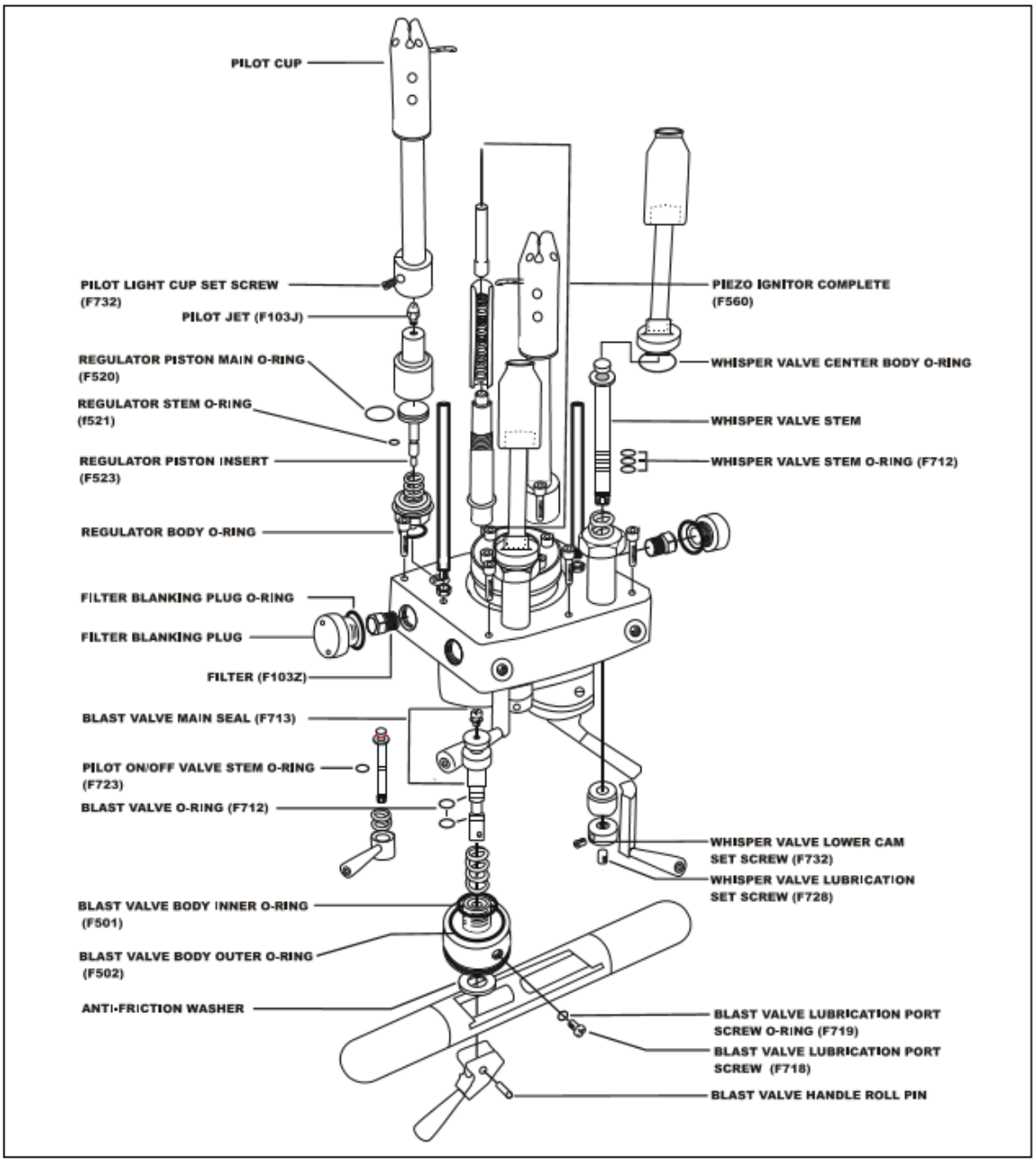

FIG. 6.19a
MK IV ULTRA SINGLE MANIFOLD ASSEMBLY

January 01, 2009 123

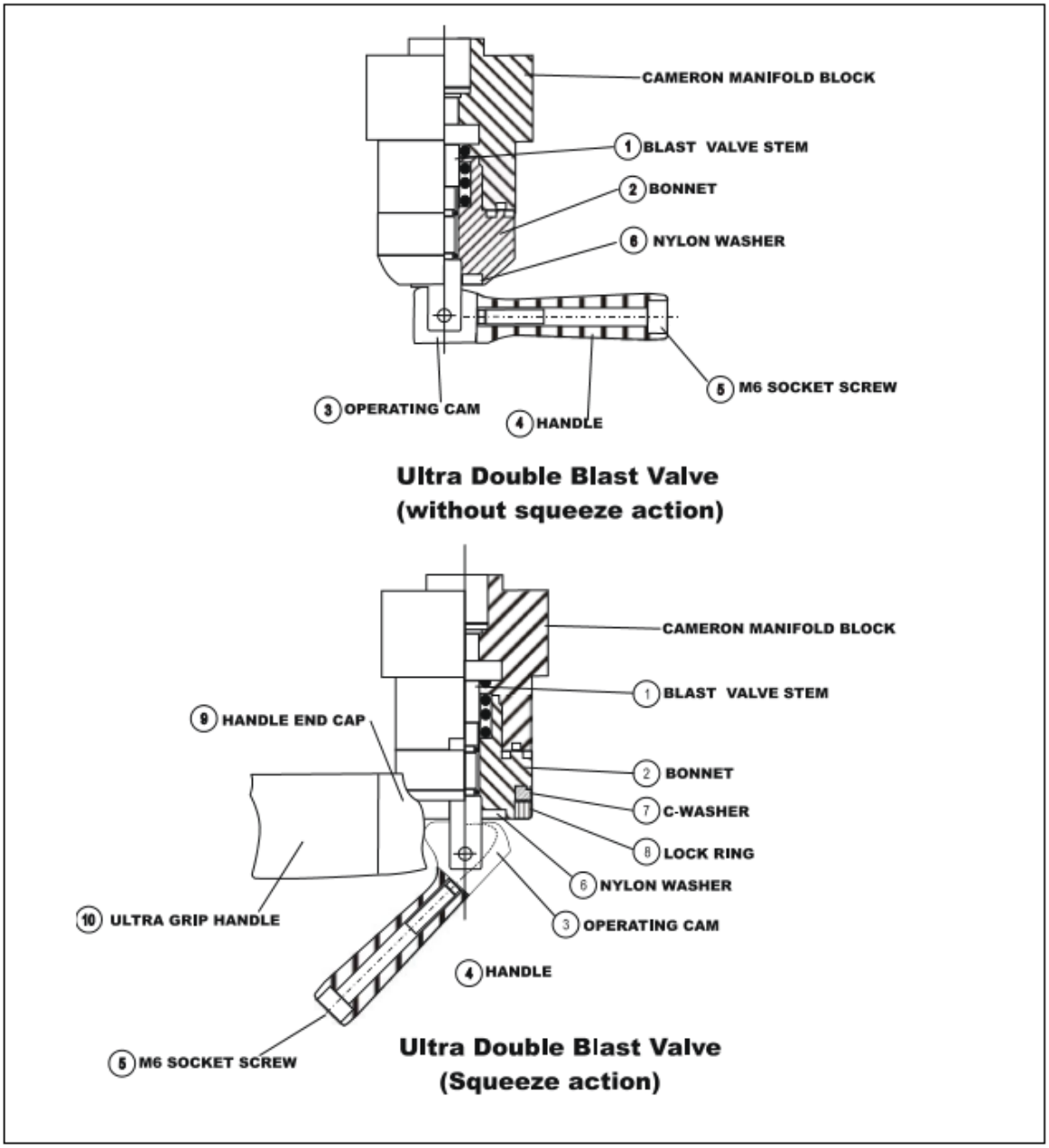

FIG. 6.19b
MK IV ULTRA DOUBLE, TRIPLE & QUADRUPLE MANIFOLD
BLAST VALVE ASSEMBLIES

6.20 WHISPER VALVE - DISASSEMBLY & MAINTENANCE - MK III & MK IV STANDARD BURNERS

A) NUPRO VALVE:

Refer to FIG. 6.20

Early MK IV Standard burners used a "Nupro" stem and seat valve (F181) which is screwed into the side of a modified Rego blast valve and is activated by turning a green or red knob. Nupro valves are not serviceable and if they fail they must be replaced.

1) REMOVAL:

a) Disconnect the compression nut that affixes the copper tube (F182T) to the valve (9/16" wrench).

b) Pull the copper tube out of the valve and slide it out of the way. The compression nut will stay with the tube.

c) Unscrew the whisper valve from the blast valve (5/8" wrench).

d) Assemble in the reverse order reusing the compression nut from the old whisper valve.

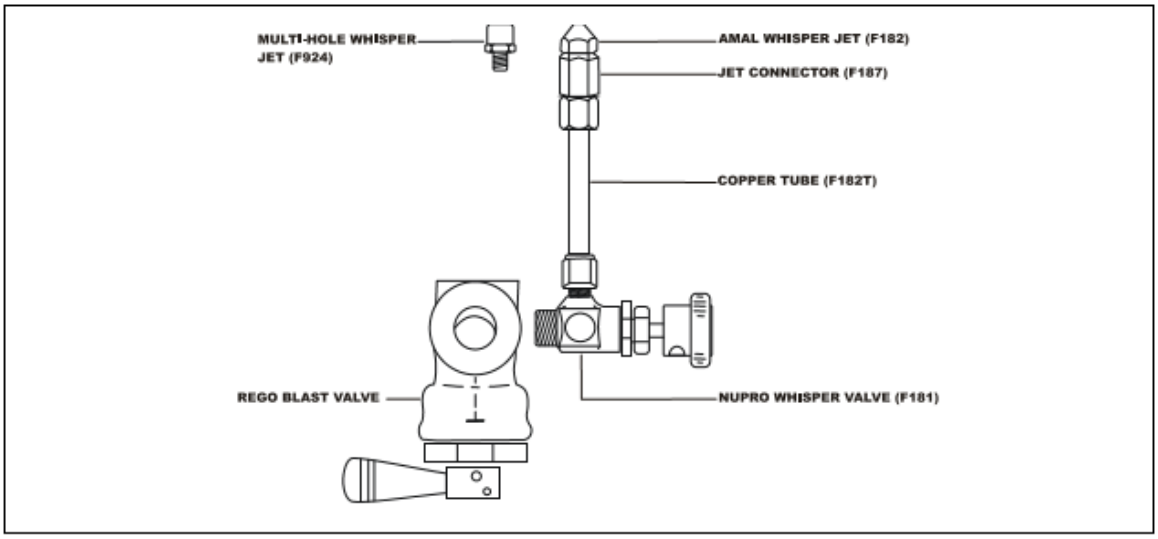

FIG. 6.20
NUPRO WHISPER VALVE

B) WAVERLY VALVE:

Later MK IV Standard burners use a modified "Waverly" ball valve (F180W) which is screwed into the side of a modified blast valve and activated by turning a blue plastic covered handle.

1) REMOVAL:

It is not necessary to remove the Waverly valve from the burner to service it, however, it may make the service process easier.

a) Refer to Section 6.20 A 1. This procedure is identical except substitute a 14mm wrench for the 9/16" wrench and a 17mm wrench for the 5/8" wrench.

2) DISASSEMBLY:

Refer to FIG 6.21

a) Close the valve fully and remove the handle retaining nyloc nut (item 12), handle (item 10), conical washers (item 8 & 9) and top spindle seal (item 7).

b) Remove the blanking plug (item 14) with a 17mm wrench.

c) Remove the ball retainer (item 6) with a 5mm hex key.

d) Remove the ball outer main seal (item 2), ball (item 5) and ball inner main seal (item 2).

e) Remove the spindle (item 3) by pushing it from the outside down and out the blanking plug hole.

f) Clean all components with a solvent.

3) REPAIRING:

A repair kit (F180K) containing all necessary renewable parts is available through Cameron Balloons U.S.

a) Renew the spindle bottom seal (item 4) by placing it on the stem of the spindle.

b) Install the spindle by pushing it through the hole in the top face of the valve, stem first from the inside of the valve body. Configure the spindle so it will accept the ball by placing its tongue parallel to the valve body.

c) Install the inner ball seal.

d) Lightly lubricate the ball with silicone spray and install it into the valve body taking care to ensure that the recess in the top face of the ball is located on the tongue of the spindle.

e) Apply pressure to the ball with a blunt instrument, taking care not to damage the ball. This will ensure that the spindle is forced into the recess and that the ball is correctly seated.

f) Install the outer ball seal.

g) Lightly lubricate the retainer with silicone spray and screw it into the valve (5mm hex key) with the retainer face having the largest chamfer being outermost.

h) Make sure that the ball is in the **fully closed** position. Torque the retainer to 150 **lb. inches**.

i) Install the top spindle seal on the spindle stem.

j) Install the conical washers on the spindle stem with the first washer convex face down and the second washer convex face up.

k) Install the handle and after placing a drop of thread lock compound on the threads of the nyloc nut, screw it onto the spindle and torque to 30 **lb. inches**.

l) Renew the Teflon gasket on the blanking plug and screw the plug into the valve and torque to 30 **lb. feet**.

m) Install in reverse order. Refer to Section 6.20 B 1.

n) Test for leaks and proper function.

6.21 WHISPER VALVE™ - DISASSEMBLY & MAINTENANCE - MK IV SUPER BURNER

MK IV Super burners use a modified "Waverly" ball valve which is screwed into the Cameron manifold block and activated by turning a blue plastic covered handle. It's very similar in appearance to the "Waverly" Whisper™ valve used on later MK IV Standard burners. Both valves use the identical interior and exterior parts (excluding the handle).

A) REMOVAL:

It is not necessary to remove the Waverly valve from the burner to service it, however, it may make the rebuild process easier.

1) Remove the Amal Whisper™ jet (5/16" Whitworth socket) and connector (9/16" socket) or Multi-hole Whisper jet (9/16" socket) from the valve tube.

2) Remove the manifold block from the burner can. Refer to Section 6.12

3) Unscrew the Whisper™ valve from the manifold block (17mm wrench).

B) DISASSEMBLY:

1) Refer to Section 6.20 B 2 for complete disassembly instructions.

C) REPAIRING:

1) Refer to Section 6.20 B 3 for complete repairing instructions.

2) Install in reverse order. Refer to Section 6.21 A.

3) Test for leaks and proper function.

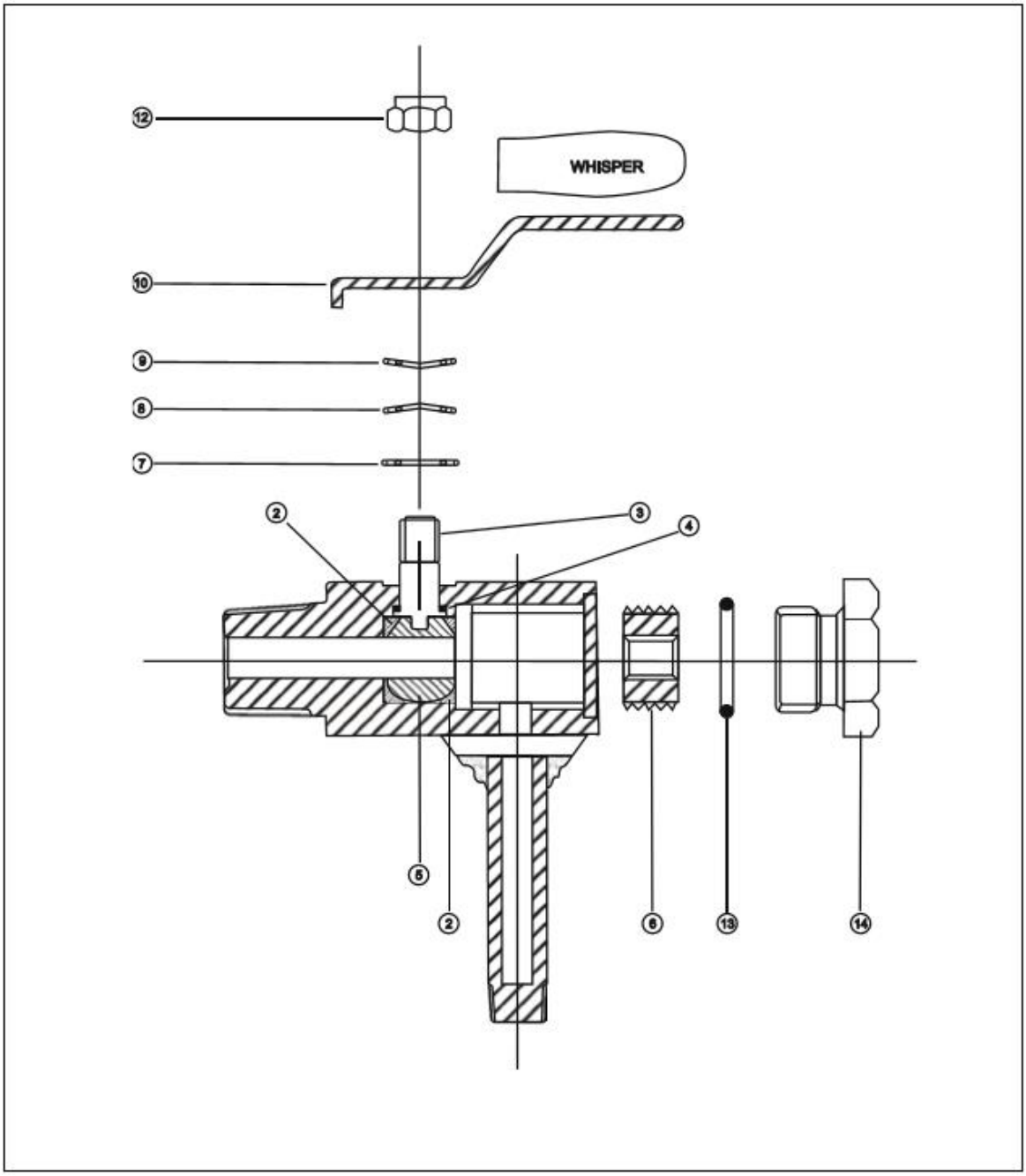

FIG. 6.21
WAVERLY WHISPER™ VALVE

6.22 WHISPER™ VALVE - DISASSEMBLY & MAINTENANCE - MK IV ULTRA BURNERS

MK IV Ultra burners use a purpose built, ramp activated, spring assisted plunger and seat Whisper™ valve which is an integral part of the Cameron Manifold block and activated by turning a blue anodized handle.

This valve may be lubricated without disassembly by following the procedures in Section 6.9 B 1.

Refer to FIG. 6.22a

A) DISASSEMBLY:

1) Turn the valve handle (item 11) to the fully **ON** position.

2) Remove the blue middle body (item 2) and upper body (item 1) assembly as one unit by holding the black Lower body (item 3) with either a 27mm or 1 1/16" wrench and unscrewing the Middle assembly with a 12mm crowfoot or wrench.

3) Turn the valve handle to the fully off position.

4) Remove the hex socket set screw in the side of the Lower cam (item 9) (3mm hex key).

5) Use an appropriate size flat blade screwdriver (8mm or 5/16" blade width. (A screwdriver may have to be modified to the correct size - refer to FIG. 6.22). Take care not to mar or destroy the threads inside the Upper cam (item 7). Screw the valve stem (item 4) down through and out of the manifold block and Lower body.

B) MAINTENANCE:

1) Clean all components with a solvent.

2) Inspect all components. If any of the three "O" rings (F712) are damaged it must be replaced.

3) Pre-pack the valve stem with lubricant until the lubricant oozes from the middle "O" ring. (Refer to Section 6.9 B 1 for this procedure)

4) Lubricate the "O" rings and valve stem with a silicone or fluorinated grease.

5) Assemble in reverse order taking extreme care not to damage the threads in the Lower cam.

CAUTION:
The threaded Whisper™ valve stem has 4 flats. A flat **MUST** align with the set screw in the Lower cam or damage **WILL** occur to the Stem and/or Lower cam.

C) ADJUSTMENT:

1) Turn the valve handle (item 11) to the fully ON position.

2) Remove the set screw in the side of the Lower cam (item 9) (3mm hex key).

3) The threaded valve stem (item 4) has four flats one of which must now be aligned with the set screw hole in the Lower cam.

4) Adjust the valve stem 90° to the next flat **IN** (**if** the valve is **not shutting off**) or **OUT** (**if** the valve is **not turning on**). Use an appropriate size flat blade screwdriver (8mm or 5/16" blade) (Refer to FIG. 6.22 for screwdriver modifications).

5) Replace and tighten the set screw in the Lower cam ensuring that it locates squarely on a valve stem flat.

CAUTION:
The threaded Whisper™ valve stem has 4 flats. A flat **MUST** align with the set screw in the Lower cam or damage **WILL** occur to the Stem and/or Lower cam.

6) Repeat steps 4 and 5 if necessary until correct operation is achieved.

A screwdriver may have to be modified to the correct size to service some vapor on/off valves and/or whisper on/off valves. Follow this procedure: Grind the thin edges of the blade until they are parallel to each other and perpendicular to the blade edge and narrow enough to fit inside the handle but wide enough not to damage the valve stem.

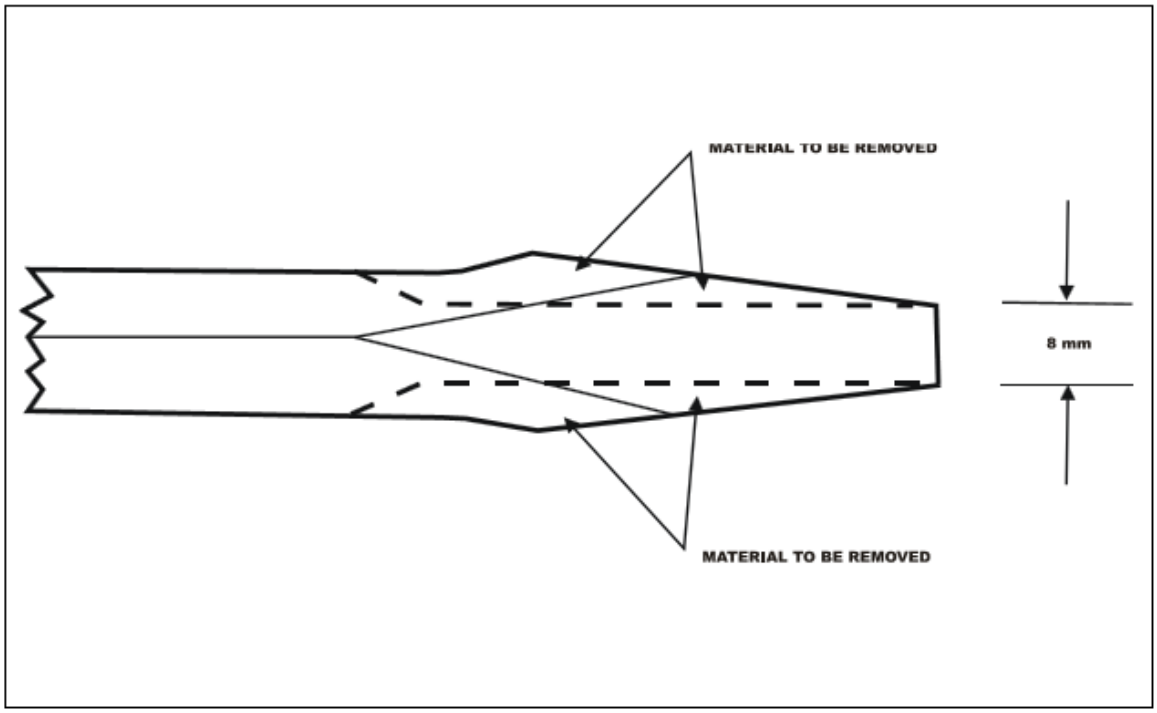

FIG. 6.22
SCREWDRIVER MODIFICATION

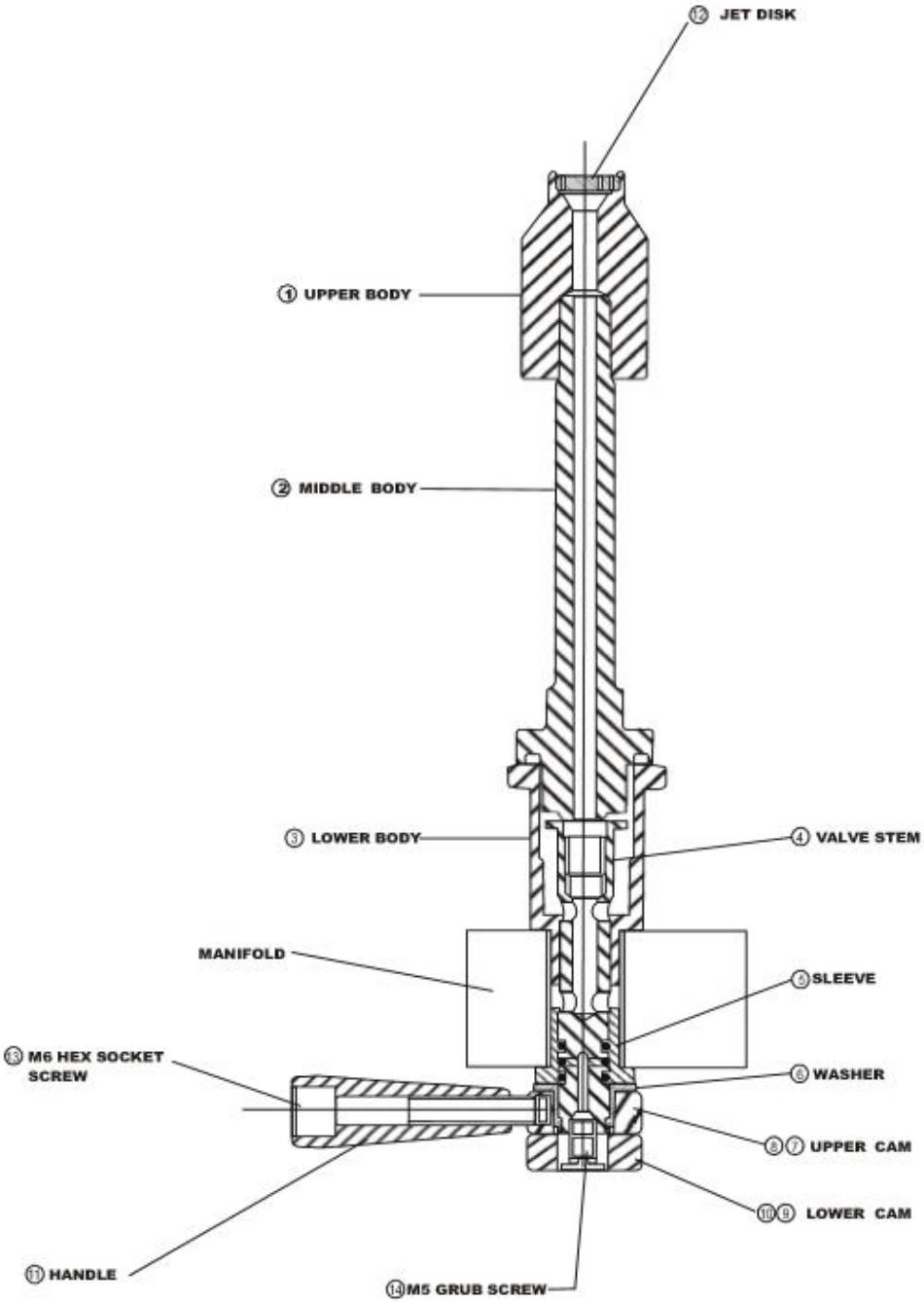

FIG. 6.22a
MK IV ULTRA WHISPER™ VALVE

6.23 PIlOT LIGHT ON/OFF VALVE - DISASSEMBLY & MAINTENANCE - MK IV STANDARD BURNERS

MK IV Standard burners use a "Waverly" ball vapor valve (F180) which is installed between the vapor delivery hose (F140) and a connector (F186) elbow (F185) assembly. The elbow attaches to the pilot light flame cup (F335). The valve is activated by turning a red plastic covered handle.

Refer to FIG. 6.11 & 6.11a

A) REMOVAL:

It is not necessary to remove the valve from the burner to service it, however, it may make the rebuild process easier.

1) Disconnect the vapor delivery hose (14mm wrench) from the valve (17mm wrench). It is important that the valve be supported with a wrench to reduce lateral torque on the connector and elbow.

2) Unscrew the vapor valve from the connector (14mm wrench). It is important that the connector be supported with a wrench to reduce lateral torque on the connector and tee.

B) DISASSEMBLY:

1) Refer to Section 6.20 B 2.

C) REPAIRING:

1) Refer to Section 6.20 B 3 a through l.

2) Install in reverse order. Refer to Section 6.23 A.

3) Test for leaks and proper function.

6.24 PILOT LIGHT ON/OFF VALVE & REGULATOR - DISASSEMBLY & MAINTENANCE - MK IV SUPER BURNER

Vapor pilot lights are standard equipment on the MK IV Super burners (liquid pilot lights are optional, refer to Section 6.24 II). The pilot light cup, which is the same on both vapor and liquid fed systems, is screwed into the top of the Cameron manifold block. The on/off valve, also the same on both systems, is a purpose made plunger and seat, spring assisted valve.

I) VAPOR FED PILOT LIGHT:

Refer to FIG. 6.24

The vapor supply in this pilot system is regulated manually by a diaphragm type regulator attached to the vapor withdrawal valve on the fuel tank. Vapor fuel is passed from the regulator, via the vapor supply hose, to the manifold block where it goes directly to the pilot light stem, jet and flame cup.

A) ON/OFF VALVE - DISASSEMBLY:

1) Turn the valve to fully ON position.

2) Remove the piezo ignitor button. (Refer to Section 6.27 A).

3) Remove the pilot light cup from the stem by loosening the hex socket set screw in the side of the flame cup and slipping the cup off the stem. (3mm hex key)

4) Remove the pilot light stem by unscrewing it from the manifold block. (14mm crow foot).

5) Remove the hex socket set screw from the handle (3mm hex key).

6) Use an appropriate size flat blade screwdriver (a screwdriver may have to be modified to the correct size - refer to FIG. 6.22). Take care not to mar or destroy the threads inside the handle. Screw the valve stem down through and out of the manifold block. Be aware that the spring between the handle and manifold block is under tension and when the tension is released becomes very active.

B) ON/OFF VALVE - CLEANING & ASSEMBLY:

1) Examine the "O" ring (F723) on the valve stem, replace and/or lubricate with silicone or fluorinated grease as necessary.

2) Clean and lubricate the bore of the valve sleeve.

3) Assemble in reverse order taking extreme care not to damage the threads in the handle.

CAUTION:
The threaded vapor valve stem has 2 flats. A flat **MUST** align with the set screw in the handle or damage **WILL** occur to the stem and/or handle.

II) LIQUID FED PILOT LIGHT:

Refer to FIG. 6.24a

The liquid fuel supply in this pilot system is regulated manually by a needle and seat type valve attached to the manifold block where the vapor supply hose is connected on vapor pilot light burners. The liquid fuel is fed, via an internal passage, to a vaporizing tube which loops through the pilot light flame cup. As the liquid fuel passes through this tube it is vaporized, then passed back into the manifold block and finally through the pilot light stem, jet and cup.

A) ON/OFF VALVE - DISASSEMBLY:

1) Refer to Section 6.24 I A except before step 4 the vaporizing tube must be removed. (12mm crow foot).

B) ON/OFF VALVE - CLEANING & ASSEMBLY:

1) Refer to Section 6.24 I B for maintenance instructions. Refer to Section 6.24 I A for assembly instructions, except prior to installing the pilot light cup the vaporizing tube must be installed.

C) MAINTENANCE:

1) The thumb wheel and lock, needle and outer needle housing may be removed by unscrewing the needle housing (17mm wrench).

2) The only maintenance is to inspect and lubricate the "O" ring on the needle and "O" ring behind the silver washer against the inner needle housing with a silicone or fluorinated grease.

3) Before assembly unscrew the thumb wheel several turns.

4) Assemble in reverse order.

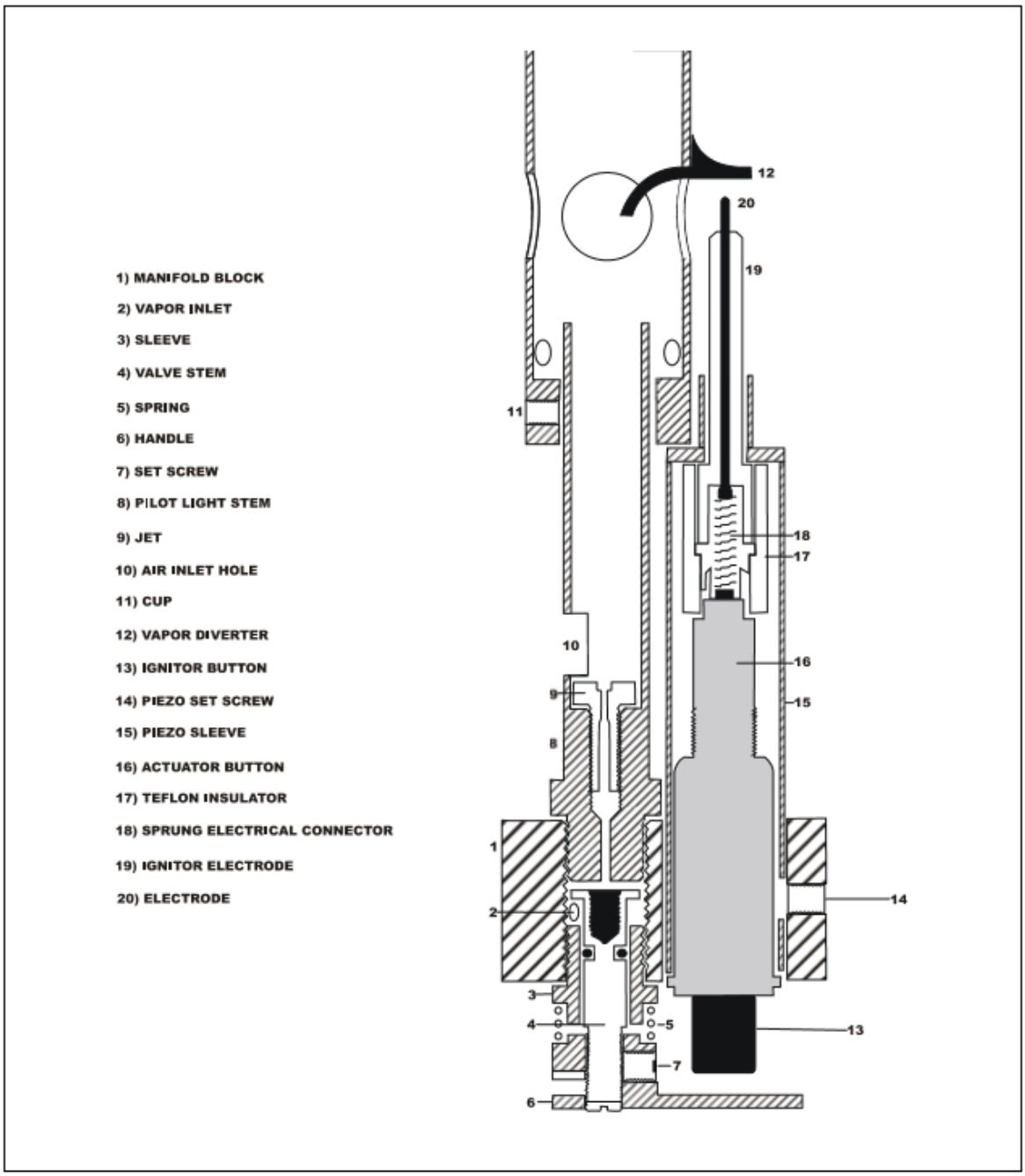

FIG. 6.24
MK IV SUPER VAPOR PILOT LIGHT ASSEMBLY

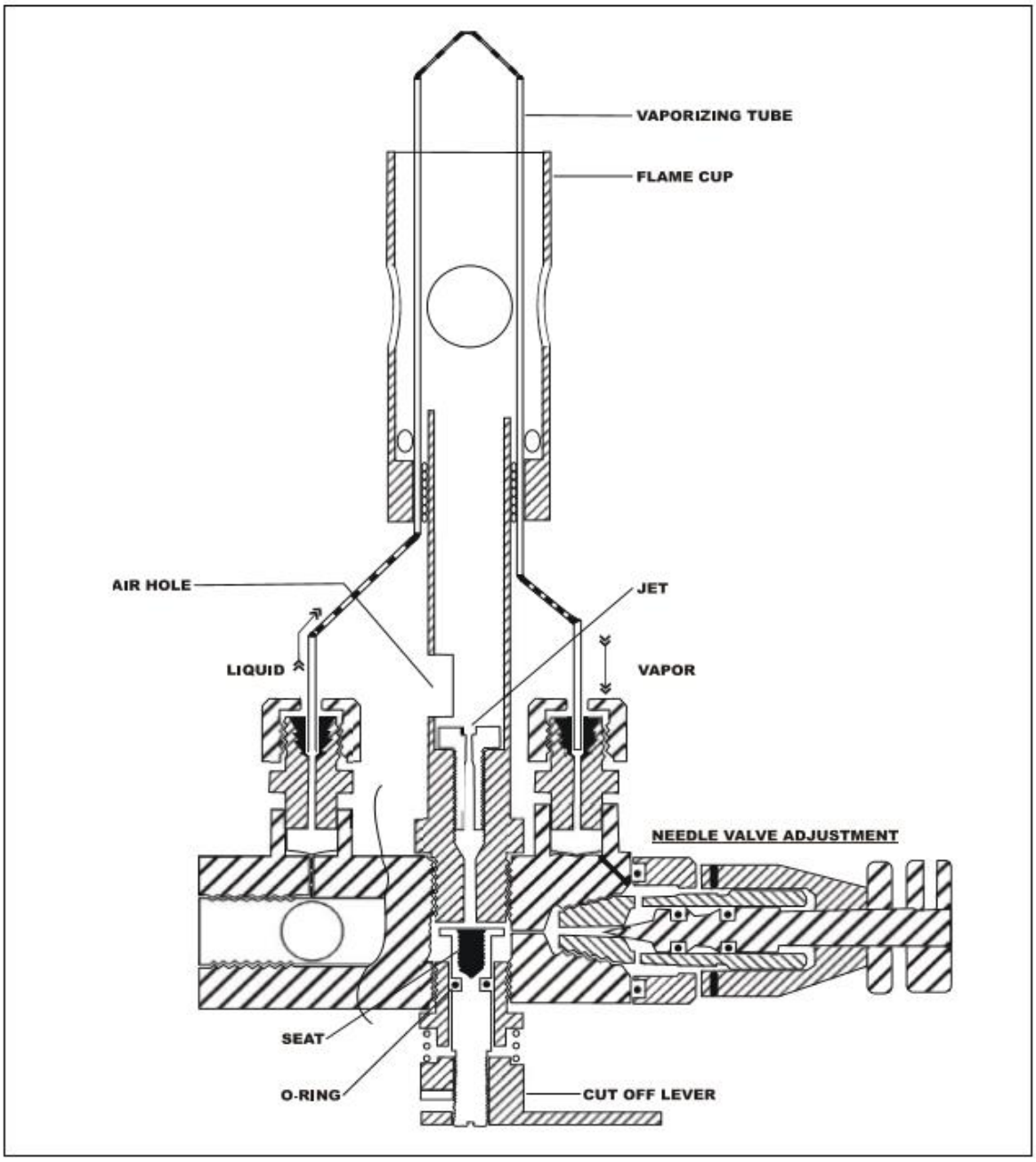

FIG. 6.24a
MK IV SUPER LIQUID PILOT LIGHT ASSEMBLY

6.25 PILOT LIGHT ON/OFF VALVE AND REGULATOR - DISASSEMBLY & MAINTENANCE - MK IV ULTRA BURNERS

A self regulating liquid pilot light is incorporated as standard equipment on the MK IV Ultra burners (vapor pilot lights are optional, refer to Section 6.25 IV D). The pilot light cup installs above a pressure regulator which is screwed into the top of the Cameron manifold block. The regulator automatically maintains a constant pilot light flame regardless of the fuel pressure.

Any contamination of the liquid pilot light system may result in the progressive reduction of pilot light flame size. When the flame size decreases, the pilot jet and/or regulator must be disassembled and cleaned before the next flight.

It is very important that any of the following maintenance procedures be carried out in clean conditions as the presence of dirt may reduce the ultimate performance of this system.

Procedures I and II **ONLY** may be performed by the owner/operator.

I) LIQUID PILOT LIGHT FILTER - REMOVAL AND CLEANING:

Refer to FIG. 6.19, 6.19a & 6.25

Liquid propane is filtered by a replaceable filter before it passes into the pilot light regulator. The filter may be accessed by unscrewing the filter blanking plug (item 1) from the side of the manifold block with the Ultra wrench. The filter may now be carefully removed, inspected and cleaned with a solvent or replaced.

II) PILOT LIGHT JET - REMOVAL AND CLEANING : LIQUID AND VAPOR PILOT LIGHT BURNERS

Refer to FIGs. 6.19, 6.19a & 6.25

A) REMOVAL:

1) Loosen the hex set screw (item 3) in the side of the pilot light cup (item 4) with either the Ultra tool or a 3mm hex key. Remove the pilot light cup by reaching down through the burner coil and pulling the pilot body straight up and out.

2) Unscrew the pilot light jet (item 6) using a 1/4" socket or nutdriver.

B) INSPECTION - CLEANING - ASSEMBLY:

1) Inspect the jet for any blockage and clean with a solvent and/or a fine wire of the proper size or replace. Do not use any large sharp objects to clean the jet as this may damage it.

2) Assemble in the reverse order taking care to align the pilot light cup ignitor grounding electrode on center and directly above the piezo ignitor electrode.

III) LIQUID PILOT LIGHT REGULATOR - REMOVAL, DISASSEMBLY AND CLEANING:

It may be beneficial **NOT** to remove the entire regulator to disassemble and clean it. This may be accomplished in the following manner.

Before removal of the regulator is possible, several steps must be taken.

A) REGULATOR - REMOVAL:

Refer to FIGs. 6.19, 6.19a & 6.25

1) Turn the pilot handle to the full ON position.

2) Remove the pilot light body. (refer to Section 6.25 II A 1)

3) Remove the piezo ignitor assembly (refer to Section 6.28 A),

4) Remove the vent duct tube with a straight blade screwdriver.

5) Remove the 5mm hex socket bolt, nearest to the regulator, that holds the manifold block to the burner can.

6) Remove the slurper tube if it blocks access to the regulator lower body. (refer to Section 6.29)

7) Remove the regulator by fitting a 22mm crowfoot (a 7/8" crowfoot may be used if absolutely necessary) around the lower half and unscrewing. The 22mm slot on the regulator lower half is 7mm thick, therefore, modification of the crowfoot may be necessary.

B) REGULATOR - DISASSEMBLY:

It may be beneficial **NOT** to remove the entire regulator to disassemble and clean it. This may be accomplished in the following manner.

1) Separate the regulator halves by unscrewing the upper body (item 5) from the lower half (item 7). Use a 12mm wrench on the flats just below the jet (item 6) on the upper body and a 22mm wrench on the lower half flats (if the regulator is still installed in the burner it may not be necessary to hold the lower half to separate the upper half). Remove the spring (item 8) and piston assembly (item 9).

2) Remove the jet (item 6) with either the Ultra tool or a 1/4" wrench, socket or nutdriver. Inspect the jet. (refer to Section 6.25 II B 1).

C) REGULATOR - CLEANING AND ASSEMBLY:

1) Inspect the "O" rings for wear and damage and replace if necessary. Carefully clean the inside of the regulator and the piston assembly using a soft lint free cloth. If the regulator housing and/or piston are heavily soiled, the following generic cleaners may be used:

a) Chlorinated solvents (Trichloroethylene)

b) Hydro carbon solvents (petroleum fractions or citrus based oil)

c) Aqueous based detergent

CAUTION:
The O-ring and rubber seal must be removed prior to the application of any of these cleaners. The piston and seal must be dried thoroughly before reassembly.

2) Check that the rubber seal (item 10) on the end of the piston does not project more than .5mm (.02") below the metal housing. If the seal projects excessively it should be pushed back into the housing. If the seal still projects by more than .5mm the excess may be trimmed flat with a razor blade or very sharp knife.

CAUTION:
Normally no lubrication is necessary on reassembly. If difficulty is experienced inserting the piston in the regulator bore, lubricate **LIGHTLY** with silicone spray only. **DO NOT GREASE**.

3) Assemble in reverse order.

4) Test the pilot light system.

IV) PILOT LIGHT ON/OFF VALVE - ADJUSTMENT & DISASSEMBLY: LIQUID AND VAPOR PILOT LIGHT BURNERS

If the pilot light on/off valve fails to function properly by not opening or not fully closing it may be adjusted. If leaks around the valve stem occur, the stem "O" ring needs service.

Refer to FIG. 6.25a

A) PILOT LIGHT ON/OFF VALVE - ADJUSTMENT:

1) Turn the pilot handle to the full on position.

2) Loosen the locking hex socket bolt (5mm hex key) in the end of the gold handle.

3) **Not shutting OFF** - screw the valve stem 1/2 turn **IN**.

4) **Not turning ON** - screw the valve stem 1/2 turn **OUT**.

5) Re-tighten the locking bolt onto the flat on the valve stem. **IMPORTANT:** If the bolt is not tightened onto the flat, damage will occur to the valve stem.

6) Repeat if necessary until correct operation is achieved.

B) PILOT LIGHT ON/OFF VALVE - DISASSEMBLY: LIQUID PILOT LIGHT BURNER

1) Turn the pilot handle to the full on position.

2) Remove the regulator. (refer to Section 6.25 III A)

3) Loosen the locking hex socket bolt (5mm hex key) in the end of the gold handle.

4) Use an appropriate size flat blade screwdriver (A screwdriver may have to be modified to the correct size - refer to FIG. 6.22). Take care not to mar or destroy the threads inside the handle cam. Screw the valve stem down through and out of the manifold block. Be aware that the spring between the sleeve and cam is under tension and when the tension is released becomes very active.

C) PILOT LIGHT ON/OFF VALVE - CLEANING & ASSEMBLY

1) Examine the "O" ring (F723) on the valve stem, replace and/or lubricate with silicone or fluorinated grease as necessary.

2) Clean and lubricate the bore of the valve sleeve.

3) Assemble in reverse order.

D) PILOT LIGHT ON/OFF VALVE - DISASSEMBLY: VAPOR PILOT LIGHT BURNER

1) Turn the pilot handle to the full ON position.

2) Remove the spacer tube. The spacer is removed with the same tools and in the same manner as the liquid pilot regulator (refer to Section 6.25 III A).

3) Loosen the locking hex socket bolt (5mm hex key) in the end of the gold handle.

4) Use an appropriate size flat blade screwdriver (A screwdriver may have to be modified to the correct size - refer to FIG. 6.22). Take care not to mar or destroy the threads inside the handle cam. Screw the valve stem down through and out of the manifold block.

E) PILOT LIGHT ON/OFF VALVE - CLEANING & ASSEMBLY

1) Refer to Section 6.25 IV C

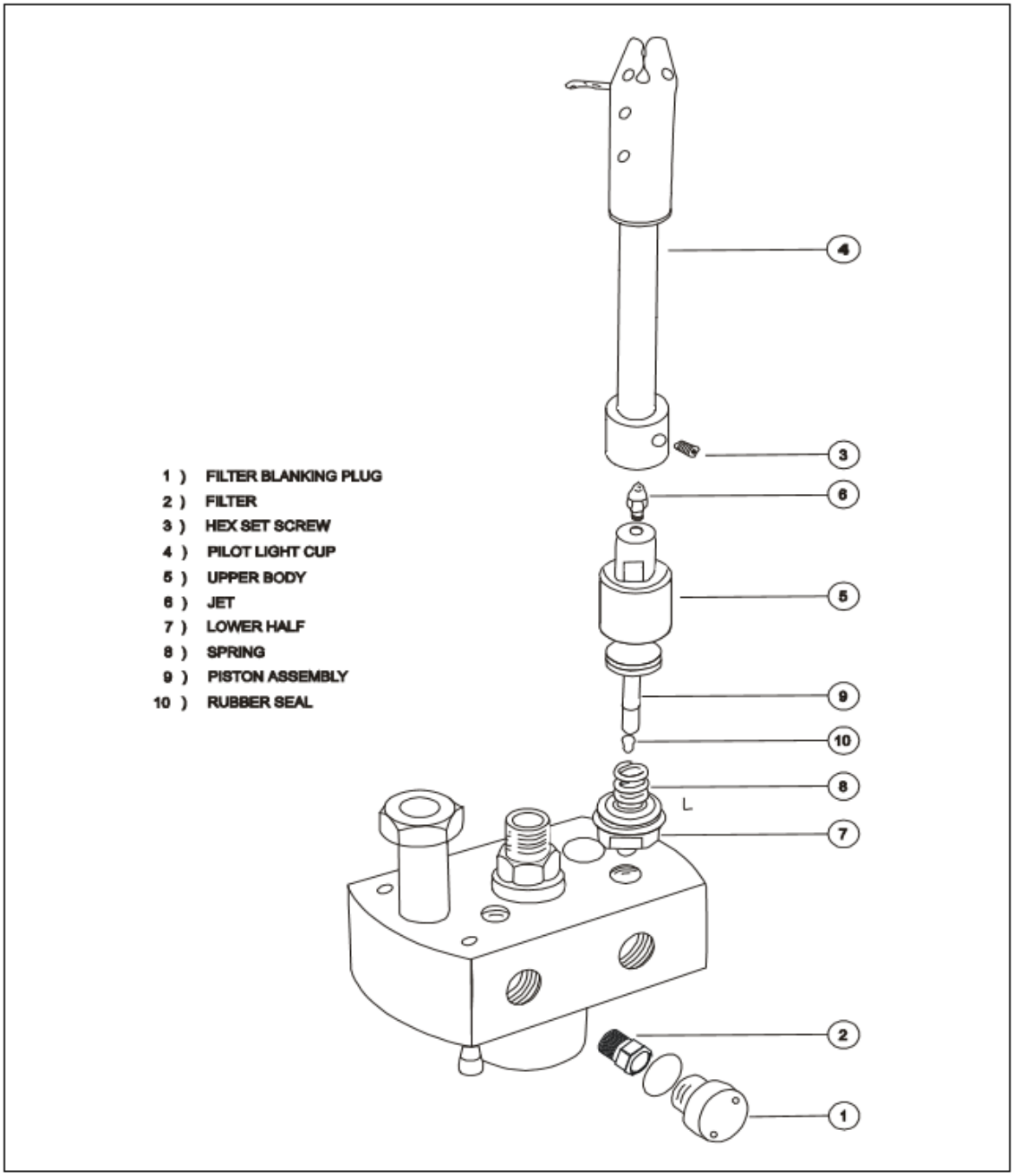

FIG. 6.25
MK IV ULTRA PILOT LIGHT AND REGULATOR

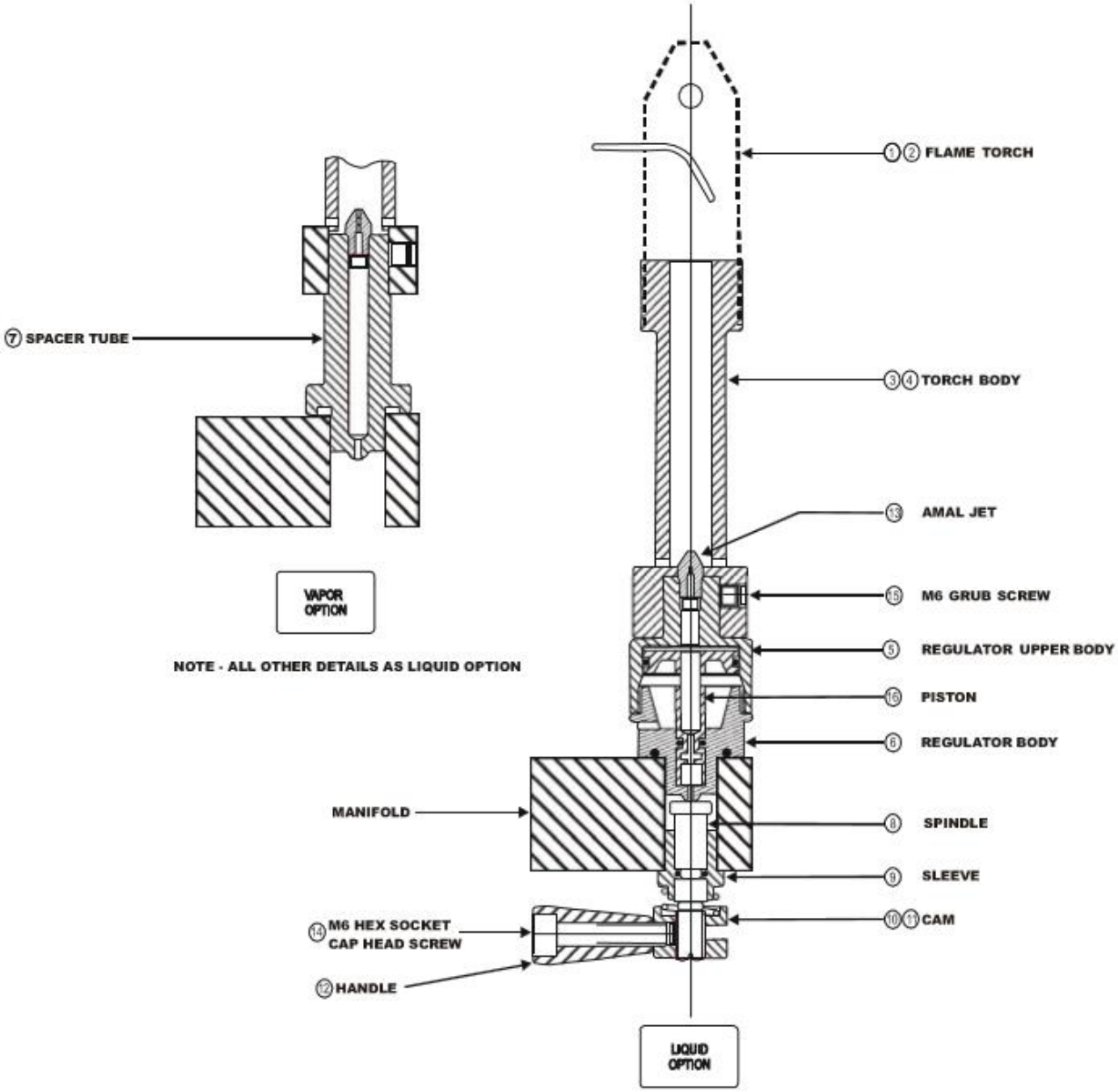

FIG. 6.25a
MK IV ULTRA LIQUID AND VAPOR PILOT LIGHTS

6.26 PIEZOELECTRIC IGNITORS - DISASSEMBLY & MAINTENANCE MK IV STANDARD BURNERS

Replacement may be completed by owner/operator.

All MK IV Standard burners have built-in pilot light ignitors. These ignitors use a piezoelectric crystal which generates a high voltage pulse when struck, and thus require no batteries.

Refer to FIG. 6.26

The MK IV Standard burner piezoelectric actuator button (F153) and its protective heat cover (F157) are located remotely to the piezo electrode (F154). The electrode is attached to the pilot light cup (F335) via a #35 stainless steel clamp (F156). The actuator and electrode are connected by a wire (F155).

The MK IV Standard burner piezo ignitor actuator and brass spacer (F158) are inserted from the outside through the bottom of the burner can and held in place with a hex-nut inside the can. The piezo ignitor wire is press fitted onto the blade connector at the top of the actuator assembly. The protective heat cover slides over the button and wire and is folded over against itself. It is secured with a nylon wire tie. The ignitor wire is routed along the bottom inside of the burner can to the pilot light cup where it attaches to the ignitor electrode with a small hex nut. The ignitor's electrode is encased in ceramic. The ceramic acts as an insulator and has a brass sleeve around its exterior. The ignitor electrode is clamped to the pilot light cup with a stainless steel clamp. The clamp should bear on the brass sleeve to avoid cracking the ceramic insulator. The curved portion of the electrode protrudes slightly into the pilot cup and it is from this curved end to the inner edge of the pilot cup that the spark jumps when the actuator button is pressed.

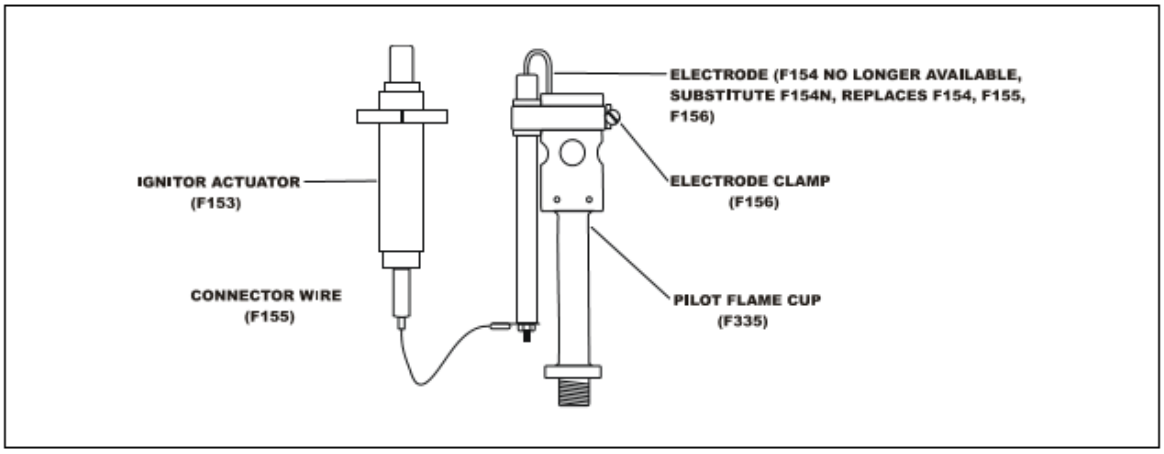

FIG. 6.26
MK IV STANDARD BURNERS PIEZO IGNITOR

6.27 PIEZOELECTRIC IGNITORS - DISASSEMBLY & MAINTENANCE MK IV SUPER BURNER

Maintenance may be completed by owner/operator.

MK IV Super burners have built-in pilot light ignitors. These ignitors use a piezoelectric crystal which generates a high voltage pulse when struck, and thus require no batteries.

Refer to FIG. 6.24

A) REMOVAL:

1) Loosen the set screw (3mm hex key) on the side of the burner manifold.

2) Pull the ignitor assembly free of the block.

B) DISASSEMBLY & ASSEMBLY:

1) The actuator button is press-fit into the piezo sleeve. To separate them, hold the piezo sleeve, twist and pull the actuator button out. All the other components are now easily removed.

2) Refer to FIG. 6.24 for the proper components order for the piezo assembly.

3) Reverse the above procedure to assemble the components into the sleeve.

C) INSTALLATION:

1) Align the hole in the side of the piezo sleeve with the set screw in the manifold block. (NOTE: Misalignment may create a bad ground, thereby reducing or preventing optimal performance).

2) Tighten the set screw to secure the ignitor. (NOTE: Over-tightening the set screw may crush the actuator housing which may render it non-functional).

3) Slide the pilot light cup against the piezo sleeve. (NOTE: The ignitor assembly must be properly grounded against the pilot light cup to function properly).

6.28 PIEZOELECTRIC IGNITORS - DISASSEMBLY & MAINTENANCE MK IV ULTRA BURNERS

Replacement may be completed by owner/operator.

MK IV Ultra burners have built-in pilot light ignitors. These ignitors use a piezoelectric crystal which generates a high voltage pulse when struck, and thus require no batteries.

A) REMOVAL:

1) Refer to Section 6.27 A.

B) INSTALLATION:

1) Refer to Section 6.27 B except use FIG. 6.28 for proper components order.

C) INSTALLATION:

1) Refer to Section 6.27 C 1 through 2.

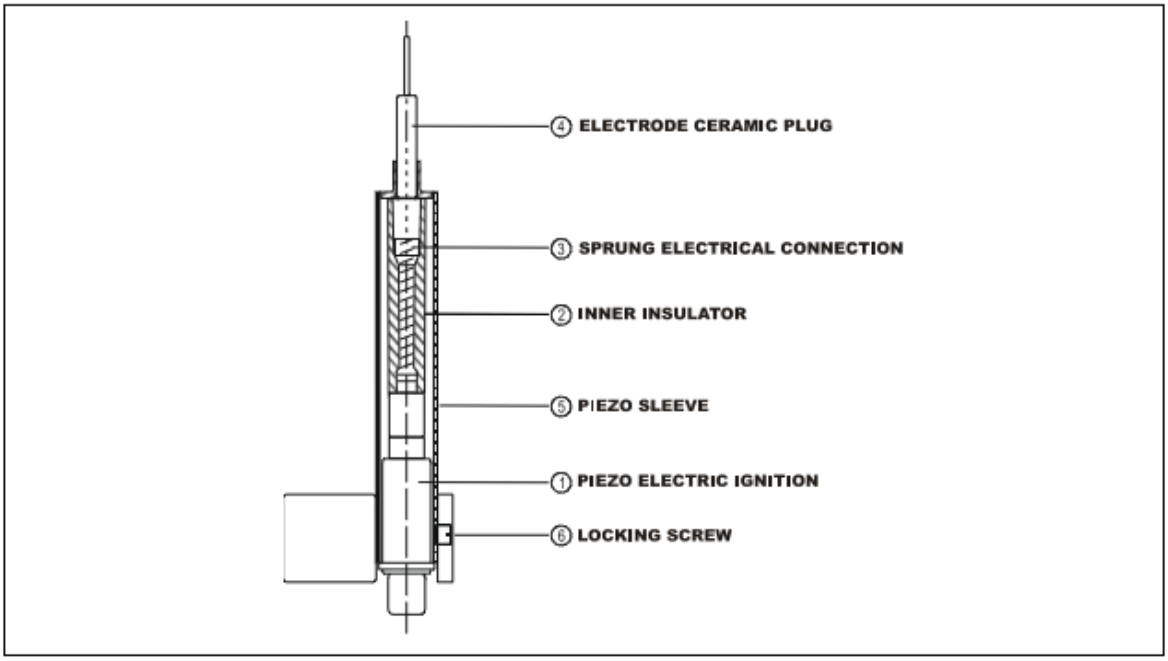

FIG. 6.28
MK IV ULTRA BURNERS PIEZO IGNITOR

6.29 SLURPER - DISASSEMBLY & MAINTENANCE - ALL MODELS

There are no maintenance requirements for the slurper except proper alignment and non-blockage of the tube. Slurpers are not required and have been standard equipment since late 1994 on MK IV Ultra burners. Slurpers function with Amal jets ONLY, they will not work with multi-hole jets.

Refer to FIGs. 6.29a & 6.29b

A) REMOVAL, MAINTENANCE AND ASSEMBLY:

1) Remove the Slurper tube from the Slurper mounting bracket by loosening the hex socket set screw in the side of the mounting bracket with a 1.5 mm hex key.

2) Inspect the tube ensuring that it is not clogged.

3) Install the tube per 6.29 B 4.

B) RETROFIT INSTALLATION:

These instructions are written for installation of slurpers if they are to be retrofitted. They may also be used to assemble the slurpers after removal and maintenance.

1) Separate the Slurper tube from the Slurper mounting bracket by loosening the hex socket set screw in the side of the mounting bracket with a 1.5 mm hex key.

2) Remove the correct main burner jet(s) and washer(s) from the jet ring(s), as indicated in FIG. 6.29a, using a 5/16 Whitworth socket.

3) Install the slurper mounting bracket, main burner jet and jet washer as per FIG. 6.29b. Torque the jet to 150 inch pounds.

4) Insert the slurper tube into the mounting bracket, taking care to rest the bottom of the slurper tube onto the floor of the burner can (no gap) and aligning the top of the slurper tube so it is centered on the jet orifice. Apply thread locking compound to the hex socket set screw. Tighten the hex socket set screw in the side of the mounting bracket.

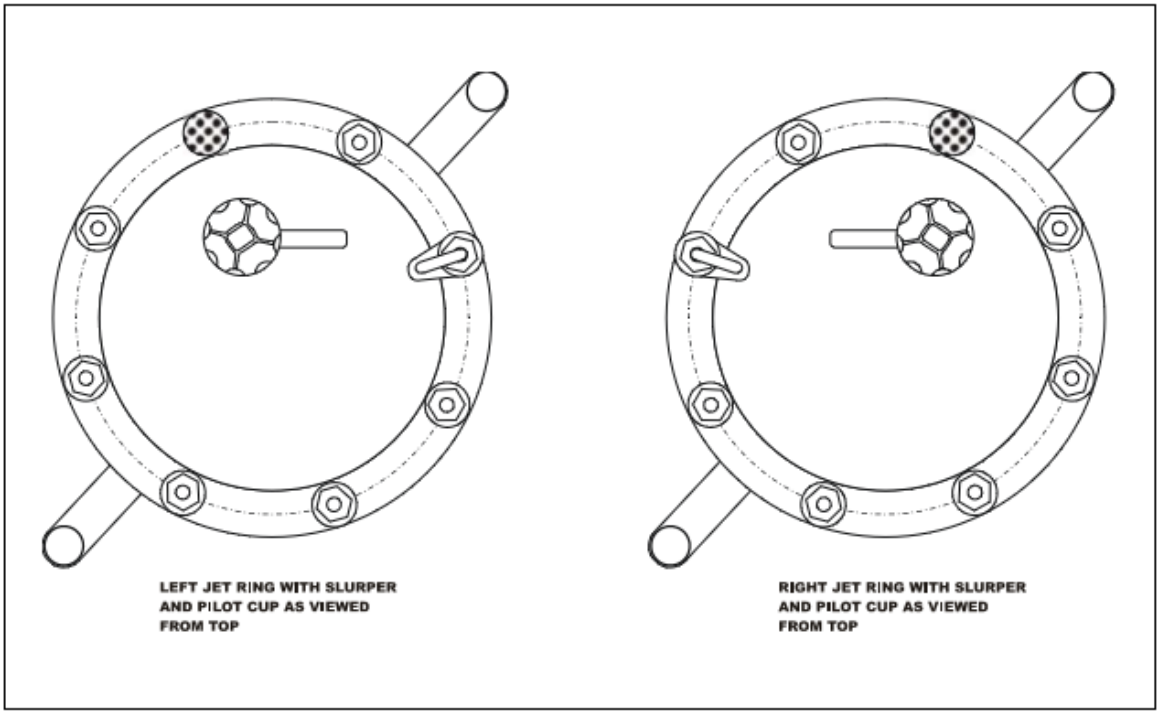

FIG. 6.29a
MK IV ULTRA JET RING & SLURPER POSITION

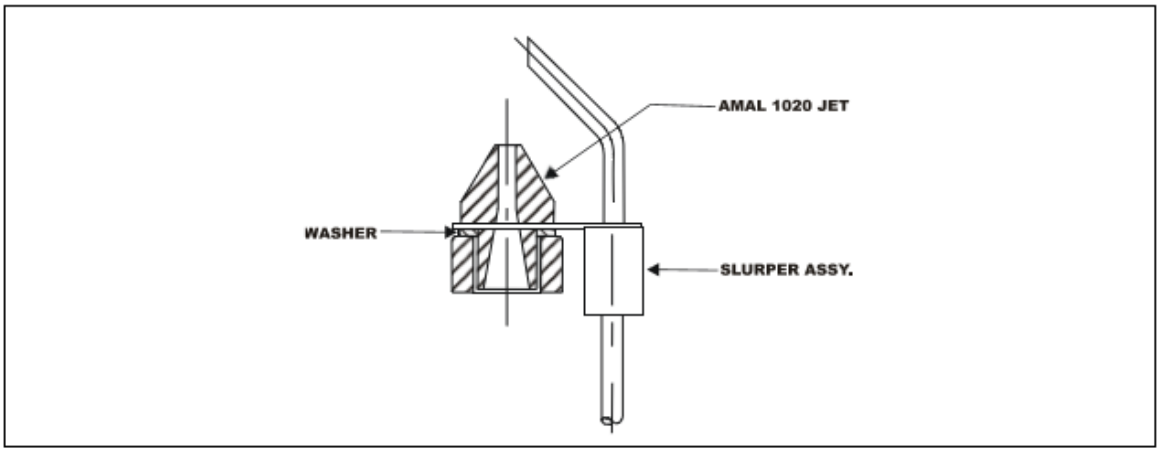

FIG. 6.29b
SLURPER COMPONENTS PROFILE

6.30 FUEL TANKS: MAJOR PARTS AND SUBASSEMBLIES

WARNING! DANGER!

HAZARDOUS CONDITIONS WHICH COULD RESULT IN INJURY OR DEATH MAY OCCUR FROM:

A. THE INSTALLATION OF NON-APPROVED PARTS OR MATERIALS
B. MODIFICATION OF ANY PART
C. IMPROPER REPAIR PROCEDURES
D. IMPROPER OPERATION OF THIS AIRCRAFT

APPROVED REPLACEMENT PARTS, MATERIALS AND REPAIR PROCEDURES ARE DOCUMENTED IN THIS MANUAL

TANK BODY:

10 gallon aluminum:

No. CB250 is a Worthington 4100-U4 43½ lb. aluminum cylinder with 5-boss head, which meets DOT standard 4E-240. This Worthington cylinder is modified to be used specifically in a Cameron Hot Air Balloon.

11-15-20 gallon stainless steel & titanium:

11 gallon cylinder: No. CB599, CB2902 are Stainless Steel.
15 gallon cylinder: No. CB426, CBUS1050 & CB2901 are Stainless Steel
15 gallon cylinder: No. CB2380 is Titanium
20 gallon cylinder: No. CB959, CBUS1060 & CB2903 are Stainless Steel
20 gallon cylinder: No. CB2383 is Titanium

These stainless steel or titanium cylinders are custom manufactured by Cameron Balloons to be used specifically in a Cameron Hot Air Balloon.

Tanks with part No. **CBUS1050C were available as Master Tanks ONLY**. Tanks part No. CBUS1050C may now be converted to Standard Tanks if a special Pressure Relief Valve (F320T) is installed. All other tanks are available as Master or Standard Tanks. All US built tanks are DOT approved.

All tanks **MUST** be equipped with the following components (Part numbers are Cameron part numbers):

Liquid withdrawal valve:

British Rego 8180 (F005) or modified Muller 344 (F825) or
Quick Shut Off (QSO) Worcester (F671 or F671T)

Fuel quantity gauge:

10 gallon (CB250) Livello, Rochester or Taylor gauge (F302G).
11 gallon (CB599 & CB2900)
15 gallon (CB426, CB2380 & CB2901) Livello or Rochester gauge (F302T)
15 gallon (CBUS1050) Rochester gauge (F302U)
20 gallon (CB959, CB2383 & CB2903) Livello or Rochester gauge (F302X)
20 gallon (CBUS1060) Rochester gauge (F302W)

Pressure relief valve:

Fisher H349 or Rego 8545 or AK-(N375-.072) or Sherwood Selpac PV 435A or Muller Type 91 or Calor 25/2 or Sherwood PV 435L or MEG MEV75FIR (all are F320) or (F320T)

NOTE:
All pressure relief valves part number **F320** & **F320T MUST** be replaced after ten years in service.

Fixed liquid level gauge:

Rego 3165F or Sherwood T12 or Fisher J410 or Seeco 10 R (F330, F330A or F2480). All fixed liquid level gauges have to be trimmed to a specific length to accommodate each series of tank.

MASTER tank only:

Vapor valve:

Rego 901P5, 9101P5, 901P5HV, 901P5H, 901P5H, & Muller 543 (F008) Sherwood PV1425C, PV1426C, 3329 (F008S).

Vapor valve w/PRV incorporated:

Muller BMV 043w/PRV, 543/PRV.

Vapor regulator:

Rego B367 or M367 (F004R), Calor 147P (F250), Lorch (F2595).

NOTE:
If the vapor valve is installed, a regulator and quick release **MUST** be properly installed on its outlet.

Vapor Regulator Quick Release:

Stillcraft DM-321-E, Dyna-Quip D3 or DM3 for Rego regulator: (F004Q).

Calor & Lorch regulator: (F004C).

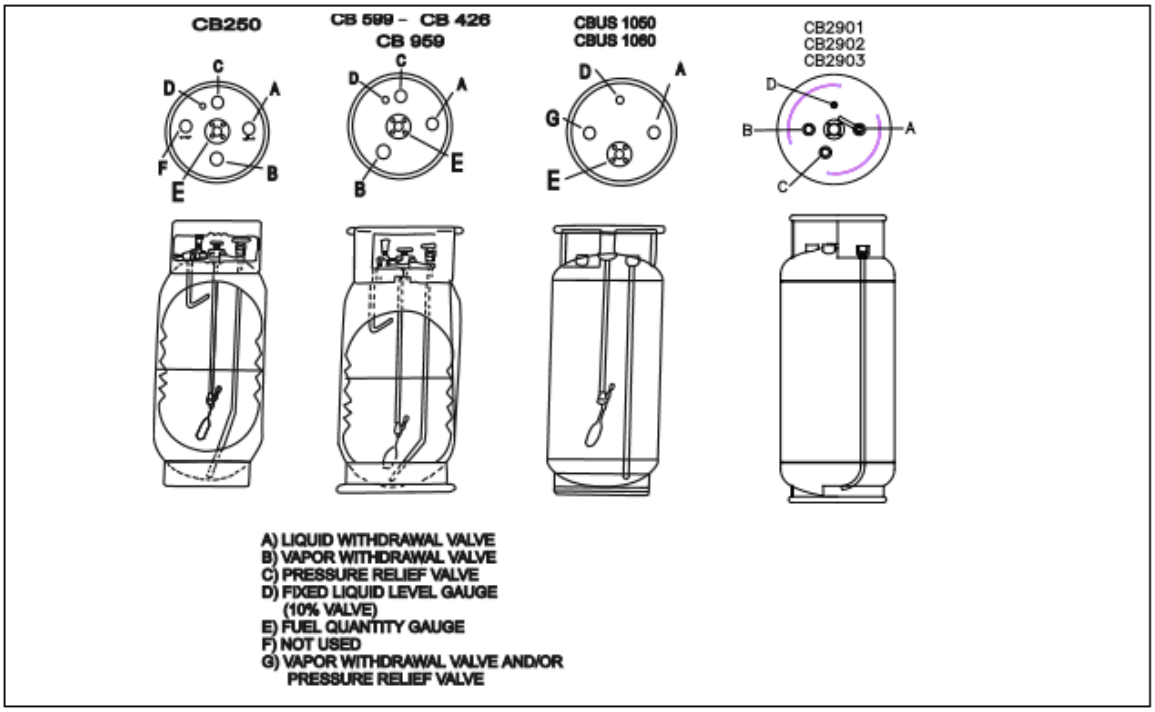

FIG. 6.31
TANKS
RELATIVE POSITIONS OF DIP TUBE,
FUEL QUANTITY GAUGE AND VALVES

6.31 FUEL TANK INSPECTION

Cameron Balloons are equipped with one or a combination of the following fuel tanks:

10 Gallon Aluminum Part no. CB250
11 Gallon Stainless Steel Part no. CB599 or CB2900
15 Gallon Stainless Steel Part no. CB426 or CBUS1050 or CB2901
15 Gallon Titanium Part no. CB2380
20 Gallon Stainless Steel Part no. CB959 or CBUS1060 or CB2903
20 Gallon Titanium Part no. CB2383

NOTE:
Not all tanks are approved for installation in every Cameron basket. Check the most recent Type Certificate Data Sheets for the proper application.

A) TANK BODY VISUAL INSPECTION:

Inspect the tank body for evidence of dents, cuts, gouges, bulges, surface cracking, weld integrity and damage from external heat tapes. Inspect the base of the tank for dents or deep scratches

NOTE:
If the tank is equipped with heat tapes and covers, **THE HEAT TAPES, COVERS AND TAPE DEBRIS MUST BE REMOVED**. Inspect the tank body for signs of electrical shorting and inspect the length of the heat tape for any damage to the insulation of the heat tape which could cause electrical arcing damage to the tank body or could cause a fire.

B) LIQUID WITHDRAWAL (DIP) TUBE INSPECTION:

The integrity of the dip tube is important. Dip tubes can be damaged by dropping the tank on its side, or transporting an empty tank while on its side.

WARNING! DANGER!
DO NOT perform tank inspections indoors or near any possible source of ignition. Tank inspection requires release of flammable propane vapor.

Inspection of the dip tube requires the tank to contain some quantity of fuel (about 2 gallons). Connect a 7141F fitting (preferably with no hose attached) to the liquid valve outlet.

1) Open the liquid valve **very slightly** while the tank is in the upright position. Initially vapor will exit from the outlet, but very soon small droplets of liquid will appear and the vapor will stop completely. This indicates that the dip tube is picking up liquid fuel from the tank bottom, and that there are no leaks in the dip tube which would allow vapor to escape instead of liquid.

2) Close the liquid valve. Invert the tank. As the tank is inverted inspect the quantity gauge; it should change from reading empty to reading more than 30 per cent full, as the arm of the gauge swings up during the inversion process.

3) Once the tank is inverted, open the liquid valve **very slightly**. In the first 30 seconds or so liquid droplets will appear, then suddenly the liquid droplets will turn to vapor only. This test verifies that the tube does not have any leaks where it is welded into the top tank boss (If it did have a leak at this point, liquid fuel would flow through the leak, into the dip tube, and escape from the slightly opened liquid valve).

C) INTERIOR INSPECTION:

If the blast valve, liquid valve or fixed liquid level gauge have any residue that indicates probability of propane contamination, inspect the inside of each tank.

WARNING! DANGER!
Remove all fuel before attempting an inspection of the interior of a tank. Complete the inspection outdoors away from possible ignition sources.

1) Open the fixed liquid level gauge (bleed valve or 10 per cent valve) to assure that there is no pressure in the tank. If gas flows when you open the bleed valve, leave the valve open and wait until it stops flowing before continuing with this procedure.

WARNING! DANGER!
While inspecting the interior of the tank, remember that it still contains flammable, if not explosive, propane vapor. KEEP ALL IGNITION SOURCES WELL CLEAR OF THE AREA!!!

2) Unscrew the 4 corner screws on the fuel quantity gauge. Gently remove the gauge, taking care not to lose the gasket sealing the gauge to the tank.

3) Inspect the interior of the tank by shining a flashlight into the tank.

If debris is found in the bottom of the tank, use a stick with masking tape aimed outwards to pick up the debris. If water is present, pour it out and add methanol: one cup for 10 and 11 gallon tanks, 1 1/2 cups for 15 and 20 gallon tanks.

When replacing the quantity gauge, use caution to insert the gauge in the correct orientation. The top of the gauge should be closest to the pressure relief valve, except on the CBUS1050 15 gallon and CBUS1060 20 gallon tank, on which the top of the gauge is oriented towards the 10% bleed valve.

4) Tighten the bolts following a pattern that will assure the bolts end up with approximately equal force at any point in time during the tightening procedure. Even slight missalignment of the gauge can cause sticking and incorrect readings.

D) FUEL TANK RE-QUALIFICATION:

NOTE:
FUEL TANKS **MUST** BE RE-QUALIFIED BY A PROPERLY D.O.T. AUTHORIZED PERSON ONLY! THE AUTHORIZED PERSON MUST HAVE A D.O.T. R.I.N. NUMBER

DOT regulations require that propane tanks be re-qualified. While the Cameron tanks number CB426, CB959, CB2380, CB2383, CB2901, CB2902 and CB2903 are not DOT approved, Cameron Balloons requires that the same inspection and re-qualification procedure be applied to these tanks as is required for DOT-approved tanks.

Tanks **MUST** be re-qualified twelve years after the initial put into service date. One of three methods is allowable.

1) Complete external visual inspection. This inspection nets 5 years use before another re-qualification is necessary.

2) Modified hydrostatic retest. This inspection nets 7 years use before another re-qualification is necessary.

3) Hydrostatic retest. This inspection nets 12 years before another re-qualification is necessary.

The visual inspection guidelines are detailed in Compressed Gas Association pamphlets C-6 "Standards for Visual Inspection of Steel Compressed Gas Cylinders" and C-6.3 "Guidelines for Visual Inspection and Re-qualification of Low Pressure Aluminum Compressed Gas Cylinders". Re-qualified tanks must be documented and stamped after testing and inspection.

Refer to Appendix H for more information.

6.32 FUEL TANK LIQUID WITHDRAWAL VALVE

All fuel tanks supplied by Cameron Balloons incorporate the 1 1/4" ACME British Rego 8180, 1 1/4" ACME modified Muller 344 or Worcester Quick Shut Off (1 1/4" ACME or Tema) liquid withdrawal valve. See Appendix F for maintenance and inspection for Worcester QSO valves. The only parts that interchange between the Rego, Muller and Worcester ACME (QSO) are the outlet o-ring and rubber washer.

A) EXTERNAL INSPECTION:

1) Inspect for signs of hairline cracks around the body.

2) Verify that no more than six threads are showing where the valve screws into the tank body.

3) The valve must be oriented such that the hose connector can attach through the opening in the tank collar with the fuel hose not contacting the edges of the tank collar (which could cause abrasion damage to the hose).

4) Verify that the screw holding the handle is tight.

5) Verify that the outlet "O" ring and "washer" (square ring) located in the outlet are each in place and undamaged. Visually inspect these components as well as feel the inner surface of the valve outlet area with a finger. If roughness is apparent, or fuel leakage through the connector when the hose end fitting (7141F) is attached and fuel supply turned on, the "O" ring and "washer" **must** be replaced.

6) Check that the valve main-seal is not leaking when in the fully closed position by connecting a British Rego 7141F connector (with no hose connected to it) to the British Rego 8180 or modified Muller valve and sniff for propane leakage.

7) Check that the outlet self seal does not leak. Apply leak detector solution to the outlet seal self, open the valve and check for leaks.

8) Check that the valve stem does not leak. Apply leak detector solution to the stem-bonnet junction, open the valve and check for leaks.

Lubricate the rubber parts and large external Acme threads of the British Rego 8180 or modified Muller valve with silicone spray. Assure that the dust cap is attached around the body of the valve and installed in or on the valve outlet when a 7141F connector is not in use.

See FIG. 6.32 for British Rego 8180

B) DISASSEMBLY:

1) Bonnet Removal and Disassembly:

a) Remove the hand wheel.

b) Remove the bonnet with a 7/8" wrench (Rego) or 3/4" wrench (Muller)

c) Separate the valve stem-main seal assembly from the bonnet by screwing the stem down through the bonnet.

d) The main seal and valve stem may now be separated.

2) Outlet Check-Valve (Chinese Table) Assembly Removal:

a) Unscrew the check-valve seat with a Notched Spanner Driver or modified Tack Puller.

b) The check-valve and spring may now be pulled free.

NOTE:
The check-valve (Chinese Table) has a conical rubber seal which, if damaged, will cause the check valve to leak. The check valve may also leak if the check valve 'O' ring has been damaged.

C) LUBRICATION:

1) Lubricate the O-Ring on the main seal with a silicone or fluorinated grease.

2) Lubricate the check-valve, outlet O-Ring and washer with silicone spray and assembly in reverse order.

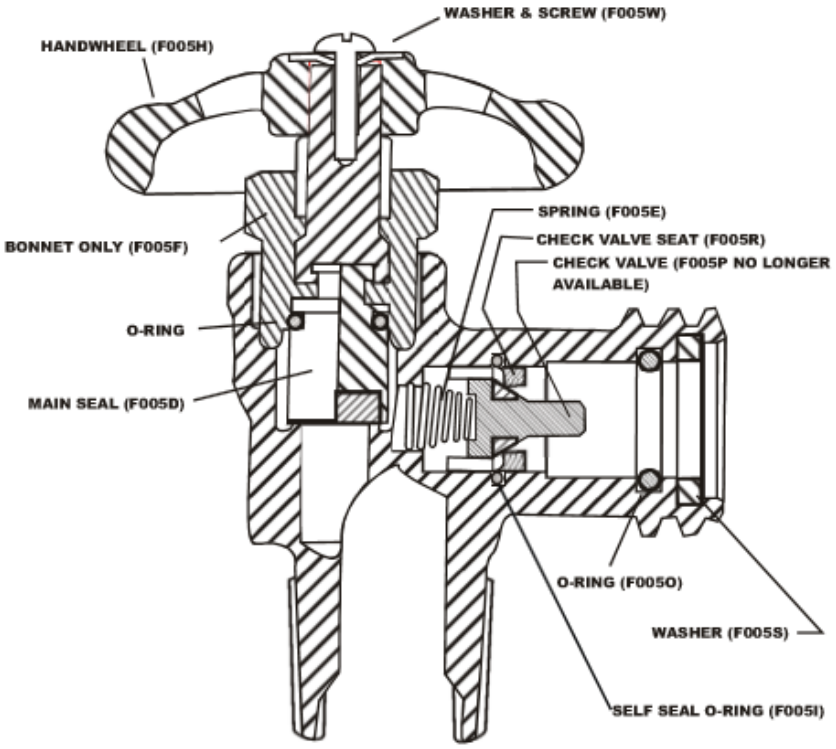

FIG. 6.32
British Rego 8180 Liquid Withdrawal Valve
(Muller 344 is similar)

6.33 FUEL TANK VAPOR WITHDRAWAL VALVE

In addition to the valves fitted in Standard tanks, Cameron Balloons US supplies fuel tanks intended for use as Master tanks incorporating the Rego 901P5HV valve or BMV 043 valve (CBUS1050, CBUS1060, CB2380 and CB2383 ONLY), adjustable pressure regulator (Rego B367 or Calor 1476P or Lorch) and a quick release fitting.

NOTE:
Tanks fitted with vapor valves MUST have a vapor regulator with quick release installed on the valve, or the valve MUST be removed and the boss in the tank plugged.

The vapor valve is fitted in the center bottom opening on the Worthington aluminum tank, **NOT THE HOLE MARKED "VAPOR"** on the tank. By installing the valve into an opening which has no dip tube, the regulator will not be fed liquid fuel for long periods after the tank has returned to an upright position following being laid on its side during inflation.

A) VAPOR PILOT VALVE INSPECTION

1) The Rego 901P5HV or BMV 043 valve should be inspected for hairline cracks in its body.

2) Verify that no more than six threads are showing where the valve screws into the tank.

3) The valve must be oriented such that the tank collar does not interfere with adjustment of the regulator.

4) Verify that no leaks occur through the valve stem-bonnet area by opening the valve half way and checking for leaks.

If a leak occurs in this area it is best to replace the entire bonnet assembly; however, lubrication of the O-ring on the main seal occasionally works.

B) REGO 901P5H BONNET REMOVAL

The BMV 043 valve will require a similar procedure.

Refer to FIG. 6.33.

NOTE:
Repairs must be performed in a clean area. Hands, clothing, tools and work area must be completely free of oil, grease and foreign matter to prevent contamination of component parts and valves.

1) Evacuate all propane from the system before any work is started.

2) Using a screwdriver, remove the handwheel screw and vapor tag by turning counterclockwise - thus allowing removal of handwheel.

NOTE:
The bonnet assembly has left hand threads as indicated by the notches in the hex edge.

3) Remove the bonnet assembly from the valve body by turning **it clockwise** with a 5/8" wrench that can develop at least 500 lb. inches of torque.

4) Inspect the valve body and clean. Be sure the interior is free of dirt, residue and foreign particles.

B) REGO 901P5H BONNET INSTALLATION

NOTE:
To prevent loosening of the valve body from the cylinder, hold the valve body with a second wrench while installing the new bonnet assembly.

1) Thread the new bonnet assembly into the valve body counterclockwise and tighten to 325-375 lb. inches torque using a suitable 5/8" wrench.

2) Reassemble the handwheel to the valve stem and secure with a new self taping screw. Tighten firmly with a screwdriver.

3) Turn the handwheel fully clockwise to close the valve.

4) Pressurize the system. Check the valve for proper operation and check all seal points for leaks by applying a high quality leak detection solution.

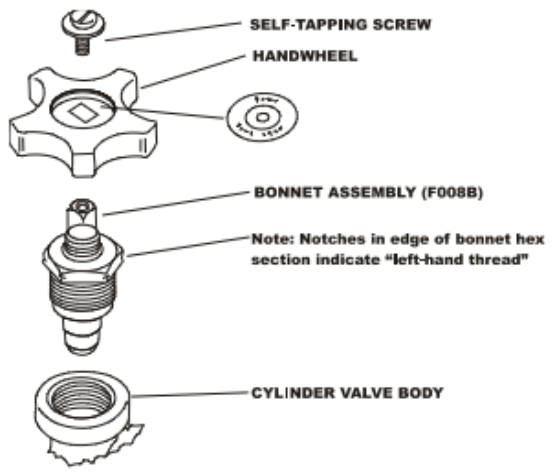

FIG. 6.33
Rego 901P5H Vapor Withdrawal Valve Bonnet Assembly
(BMV 043 is similar)

6.34 FUEL TANK VAPOR WITHDRAWAL REGULATOR

The vapor regulator is Rego (F004R discontinued) or Calor (F250 discontinued) or Lorch (F2595 present) connects to the pilot light vapor hose through a quick release fitting (F004Q or F004C). The regulator reduces the pressure from the tank to operate the pilot light. The regulator is adjustable, however, normally the operator will adjust the flow rate once and leave it set using the locking nut to hold it in place.

A) REGULATOR INSPECTION:

1) Test the adjustment over the full range.

While the pilot light is ignited,

a) Screw the adjustment knob or T-handle all the way in; the flame should increase and sometimes blow itself out.

b) Screw the adjustment knob or T-handle **almost** all the way out; the flame should go out or be very small.

If screwing the adjustment inward does not ultimately result in the pilot light flame reaching well above the top of the burner vaporizing coils, then the orifice in the pilot light assembly is probably clogged. Inspect the orifice for debris.

2) **(Rego ONLY)** Open the vapor valve with no hose connected to the quick release fitting. Check for any flow of propane vapor from the small vent hole on the body of the pressure regulator. If propane is flowing from this hole, it indicates that the vapor regulator diaphragm is leaking and must be replaced.

6.35 FUEL TANK VAPOR HOSE QUICK DISCONNECT

A) INSPECTION:

1) Open the vapor valve and turn the regulator adjustment 3/4 of the way in.

a) Check for leaks around the Quick Disconnect outlet with and without a hose inserted.

6.36 GIMBAL BLOCK BURNER MOUNTING

Cameron Balloons most recent method of mounting burners into frames utilizes an alloy Gimbal Block. Refer to FIG. 6.36. **See Appendix U for the most current version.**

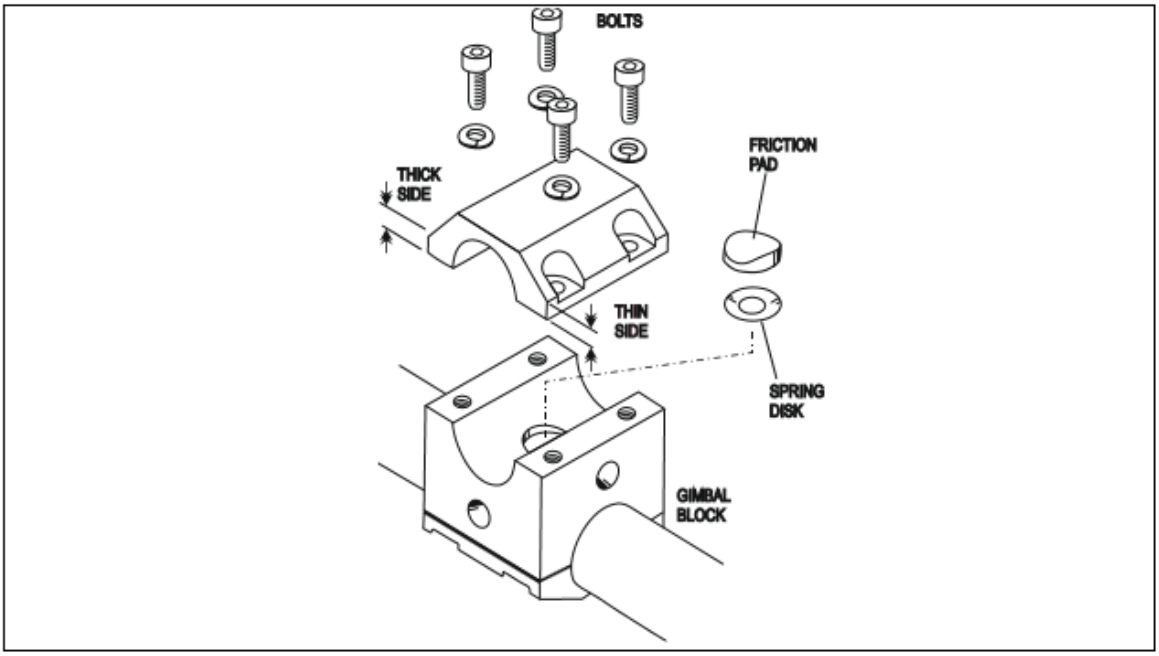

FIG. 6.36
GIMBAL BLOCK BURNER MOUNTING

If the Gimbal Block must be disassembled for any reason the following procedure MUST be used for reassembly.

1) Refit the Spring disc and Friction pad into the Gimbal Block.

2) Relocate the burner into the frame ensuring that it is oriented correctly.

3) Apply a small amount of grease onto the frame journal.

4) Apply thread locking compound to the 2 bolts on the "thick" side of the Cap. Screw down and FULLY TIGHTEN these bolts.

5) Apply thread locking compound to the 2 bolts on the "thin" side of the Cap. Screw down and adjust tightness to give desired burner movement tension.

See Appendix U for the most current version of the Gimbal Block Mounting System.

6.37 FUEL MANIFOLD – OPEN BASKETS

Fuel manifolds are available as optional equipment on every basket Cameron builds. The components used to fabricate the manifolds are serviced in the same fashion as other fuel system parts.

GENERAL DESCRIPTION - TWO TANK MANIFOLD:

Four basic configurations of fuel manifolds are available from Cameron Balloons to accommodate open basket models having inside widths of 37"-39", 41"-43" and 45"-47" and partitioned baskets. A three 10 gallon tank configuration is currently available for the 47"-49" basket and is similar in components and installation procedures.

The part number stamped on the manifold will have an issue letter as a suffix.

See Appendix X for a complete basket, fuel tank and manifold compatibility list plus installation instructions for current style manifolds.

NOTE:
These manifolds are designed to be used with the standard burner liquid hoses. Once installed in the basket, these manifolds may or may not be connected into the fuel system of the balloon for a particular flight. If the manifold is used, **ALL** fittings **MUST** be connected to their respective tanks. **A manifold MUST not be used if one or more fittings are left unconnected**.

NOTE:
MANIFOLD FUEL HOSES MUCH BE REPLACED AFTER 10 YEARS SERVICE

A) INSPECTION:

1) Inspect and service the 7141F fittings the same as the fitting on the end of the burner hose.

2) Inspect the hoses for chaffing and cracks, specifically where the hose may contact the basket wall. If the braided metal interior sleeve is exposed, the hose **MUST** be replaced before the next flight.

3) Inspect and service the 7141M fitting and its rubber or plastic protective cap in the same manner as the liquid withdrawal tank valve. Both valves use the same O-rings and rubber washers. Refer to Section 6.32.

4) Check for leaks around all the screw together fittings and the hose ends with a high quality leak detector.

5) Inspect the plastic cable ties that secure the manifold to the mounting block (old style) and the cable ties that attach the mounting block-manifold assembly to the basket wall. If any are broken then they **MUST** be replaced.

B) INSTALLATION OVERVIEW – EARLY STYLE:

IMPORTANT:
Installation of the manifold into the basket must be done by an FAA certified repair person.

Proper installation is important to prevent damage to the manifold in flight, ground handling, or transport and to prevent failure of the manifold if the system is exposed to high impact forces.

The manifold(s) must be installed according to these instructions. The manifold must be positioned in the basket to prevent stress from ever being placed on the hoses and so the hoses cannot be pinched or rubbed by the tank collars, basket wall or any other part.

The hardwood mounting block and nylon cable ties are integral to the proper function of the manifold. They must be used, and no other parts may be substituted for them. Some of the functions they perform are to provide a degree of electrical insulation to help prevent electrical damage to the fuel system and to intentionally provide a mechanically weak point in the manifold mounting system which will help prevent damage to the fuel hoses caused by basket distortion resulting from high impact forces.

C) PARTS LIST – EARLY STYLE:

1) Manifold assembly

2) Hardwood mounting block

3) 3/16"x8" long nylon wire ties (B069), 2 or 3 Required (old style only)

4) 5/16"x15" long nylon wire ties (B070), 2 Required

D) INSTALLATION INSTRUCTIONS – EARLY STYLE:

1) CHECK for presence of each part listed in above parts list.

2) MEASURE inside width of basket end horizontally between the points where the shoulders of the fuel tanks touch the opposite walls just below the base of the tank collar (non-partitioned basket ONLY).

3) CONFIRM that the basket end width falls within one inch (1") of the rated size of the manifold provided (non-partitioned basket ONLY).

4) INSTALL fuel tanks with covers in the basket.

5) TIGHTEN tank straps tightly (to assure tanks are fitted very snugly into basket corners).

6) CONNECT manifold to both tanks. Rotate the tanks as necessary to avoid kinks or twists in the hoses.

7) POSITION the manifold so that the fuel hoses make smooth bends to the tank valves and MARK the location for hardwood mounting block (the smooth bends in the hoses provide excess hose length which is necessary to protect the fuel system from being damaged as a result of basket flexing from severe impact).

8) MOUNT the manifold to the hardwood block (old style only) using 3/16" wire ties so that two of the large holes in the hardwood block are common to both a large and a small wire tie.

9) MOUNT the manifold in the marked position using two 5/16" nylon cable ties.

10) Trim ends of all nylon cable ties used in steps #8 and #9.

11) INSPECT the installation:

a) No kinks or twists in either hose,

b) Smooth bend in each hose to provide excess for severe basket flexing

c) Hoses not touching anything (tank collar, basket wall, etc.),

d) All cable ties snugly tightened.

11) REPEAT 1 through 10 for other manifold, if present.

12) Add three pounds to the basket weight in the flight manual for each manifold installed.

13) INSTALL flight manual in document display/flight manual case in the basket.

14) MAKE appropriate aircraft log entry documenting the installation.

For assistance or advice relative to the installation of these manifolds, contact Cameron Balloons US at (734) 426-5525 or
email: techsupport@cameronballoons.com.

6.38 ELECTRIC HEAT TAPES:

WARNING:
Incorrect use of electric heat tapes may result in extreme hazard, property loss, injury or death. BEFORE INSTALLING OR USING HEAT TAPES, READ AND FOLLOW ALL INSTRUCTIONS BELOW.

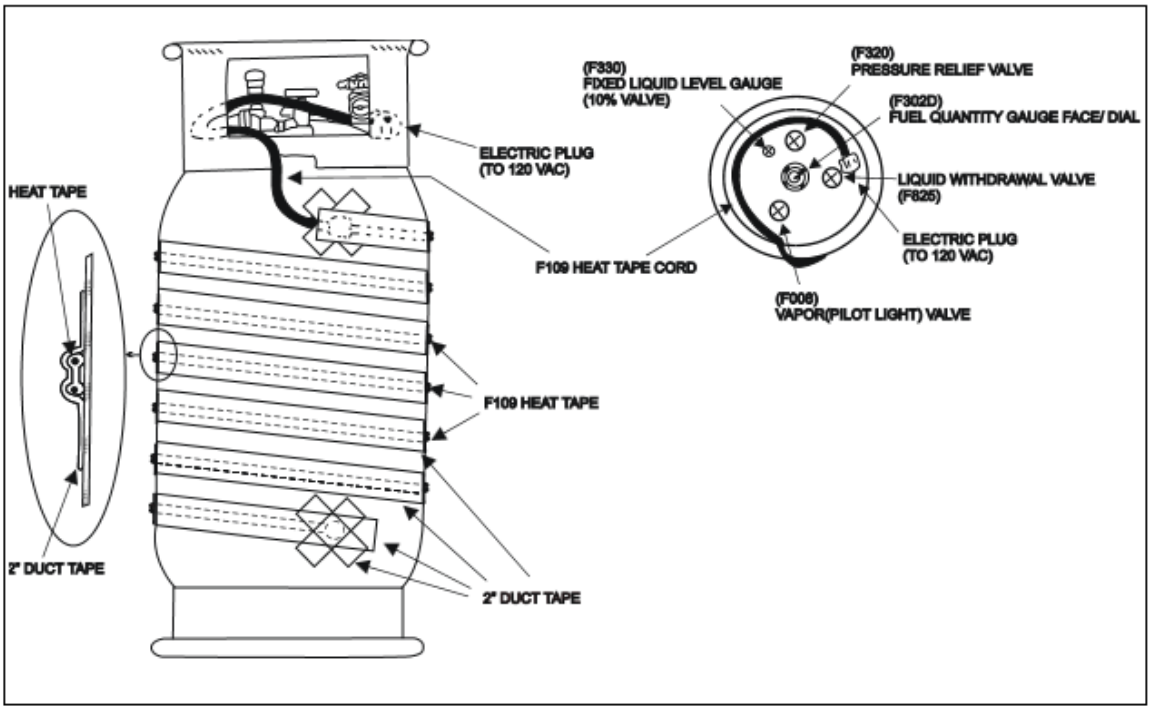

FIG. 6.38
Typical Heat Tape Installation

A) INSTALLATION

1) Assure that outside of tank is clean, so that duct tape will adhere well.

2) Use 2-inch wide duct tape. Tape the plastic connector block between the power cord and the flat heat tape to the tank in the position shown in the FIG. 6.38 above.

3) Wrap the heat tape spirally onto the tank in the position shown. Securely tape the heat tape end to the tank. A consistent, 1 3/4-inch gap must be maintained between wraps of the heat tape.

4) Use 2-inch wide duct tape to secure the heat tape to the tank. Apply the tape along the heat tapes entire length. When properly installed, the heat tape will be totally covered by the duct tape.

5) INSPECT the installation to assure that:

a) the heat tape is not twisted

b) the minimum 1 3/4" gap between the wraps of the heat tape is maintained throughout its entire length

c) the heat tape is securely held against the side of the tank by the 2-inch wide duct tape

6) Lay the electric power cord inside the tank collar as shown in FIG. 6.38.

7) Spray silicone lubricant onto the inside of the tank cover foam to facilitate installation of the fabric/foam cover assembly. From the top of the tank, pull the fabric/foam cover assembly onto the tank and tie the draw ropes at the top and bottom of the cover.

WARNING! DANGER!
Cameron foam-insulated tank covers MUST be installed and at all times remain in place over heat tapes to protect the tapes from damage. Damaged heat tapes could cause fire or electrical shock which could result in injury or death.

B) USE:

WARNING! DANGER!
Do NOT connect heat tapes to an electric power source while tanks are in building, vehicle, or other enclosed space. Overheating may cause release of flammable gas, explosion, and/or fire, which could result in injury or death.

1) ASSURE that each tank to be heated is filled to, but NOT above, fixed liquid level tube (bleed valve) in tank (This amount of fuel allows the use of the table below to plan heating times, results in consistent heating times for all tanks, and assures a vapor space in the tank to allow for liquid fuel expansion during heating without over pressurizing the tank and causing potentially dangerous release of propane through the pressure relief valve).

2) Connect the heat tapes to an electric timer, using an extension cord rated for the total load of the heat tapes you connect (Total power consumption equals the number of heat tapes in use multiplied by 180 watts per tape for blue tapes or 168 watts for orange).

3) Carefully set the timer to apply power to the heat tapes for the length of time specified in the table below. The table shows the MAXIMUM length of time to heat the tank(s) based on the GREATER of fuel temperature or air temperature.

WARNING! DANGER!
The electric power cord on the heat tape must NOT pass under the tank belt (between the tank belt and the tank). Improper routing of the heat tape may cause damage to the insulation resulting in a fire or electric shock hazard, which could cause injury or death.

MAXIMUM TIME TO RUN HEAT TAPES:

Maximum of Fuel Temperature or Expected Air Temperature (°F)	Maximum Duration of Heating (Hrs.)
60	1/2
50	3/4
40	1
30	1 1/2
20	2
10	2 1/2
0	3
less than 0	3

4) Connect the timer to a power outlet rated for the total load of the tapes you are connecting (Most electric circuits are designed for a maximum of at least 1800 watts total electrical load). If it is necessary to use an extension cord, it must be rated for the total electrical load of the tapes you are connecting 168 watts (black & orange tape) or 180 watts (blue tapes) times the number of heat tapes connected to the cord.

5) At the time that the heaters should be shut off, personally disconnect the electric power. **DO NOT** rely on the timer to function correctly. The purpose of the timer is to assure that the tapes are shut off if you for any reason are unable to disconnect them yourself.

WARNING! DANGER!
Tanks must always be kept in a position which keeps the excess pressure relief valve inlet in VAPOR. Assure that the tanks are upright (valves up) during heating and use.

6.39 ALLOWABLE DAMAGE
GENERAL:

The following specific conditions do NOT make the balloon un-airworthy. Although operation of the balloon is allowed, it is best to repair these conditions at the earliest convenient opportunity, preferably no later than the time of the next Annual/100-hour inspection.

Consult Cameron Balloons if questions arise on the airworthiness or legality of a repair, installation or equipment damage.

A) THE PIEZOELECTRIC IGNITOR(S):

May be inoperable.

B) MAIN BURNER JETS:

Four jets per burner coil may be missing, but should be replaced as soon as possible (owner/operator can replace jets).

C) FUEL HOSES:

May have small cracks or abrasion marks in exterior rubber covering, provided the braided steel reinforcement inside cover is not exposed.

NOTE:
CAMERON BALLOONS U.S. REQUIRES FUEL HOSES TO BE REPLACED AFTER 10 YEARS IN SERVICE.

D) TANK JACKETS:

May be torn or damaged.

APPENDIX 5 – BASKETS – additional information

Basket material specifications (''Appendix E'')

APPENDIX E

BASKET MATERIAL SPECIFICATIONS

Material:	**Specification:**
Rattan	Kooboo, sizes 4-6 mm natural 7-9 mm natural 5.5 mm milled 7.5 mm milled 8-10 mm natural 12-14 mm natural Tohiti 18-20 mm natural Tohiti 22-25 mm natural
Solid Floor	1/2" (12mm) Marine Grade Plywood 3/4" (18mm) Marine Grade Plywood
Skids	Oak, Maple, Ash or Other Hardwood
Skid overlay	nylon or UHMW
Suspension cable	6mm diameter, 6 x 19, Stainless Steel
Handle Rope	3/4" diameter soft Polypropylene 5/16" diameter soft Polypropylene 1/4" diameter soft Polypropylene
Scuff leather	9 - 11 oz. Latigo
Scuff Rawhide	Water Buffalo Limed Hide
Bolster Suede	4 - 4 1/2 oz.
Bolster Leather	4 - 5 oz. cowhide 6 – 8 oz. bullhide
Bolster Cordura	11 oz.
Bolster & Horizontal Scuff Lacing	1/8" polyester braided
Scuff Rawhide Vertical Lacing	Water Buffalo Limed Hide 1/8" Thongs
Flexi-Rigid Poles	1 1/4" O.D. nylon 101 annealed
Rope Handle Reinforcement	3/8" O.D. nylon 101

Open baskets with top frame and solid floor (''Appendix J'')

APPENDIX J

OPEN BASKETS WITH TOP FRAME AND SOLID FLOOR

J.1 GENERAL DESCRIPTION

Cameron Balloons US offers open (no inside partitions) baskets, which incorporate a rigid top frame and either a woven floor or a solid floor. These baskets incorporate the FlexiRigid™ burner support system. In the logbook, flight manual and on the basket identification plate, the part number includes all the information needed to identify the basket. For example, **301-6FSHA**. **(301)** indicates the Aristocrat series. **(–6)** indicates the basket size, in this case –6 is a 46x62 basket, we also offer (-7) for 42x50 and (-3) for 42x52 and (-4) for 42x58 basket and (–5) for 48x72 basket. **(F)** indicates a flat top. **(S)** indicates a solid floor, we also offer (W) for woven floor. **(H)** indicates a hi-spec, which means the hi spec basket may carry 15 or 20 gallon fuel tanks, we also offer (S) spec which means the standard spec basket may only carry 15 gallon fuel tanks. The **(A)** indicates the Drawing Revision. For all repairs below the top frame on woven floor baskets refer to **Section** 7 "***BASKET AND SUSPENSION SYSTEM"*** in the main manual.

J.2 BASKET SKIDS – SOLID FLOOR BASKET

Skids are made of Maple, Red Oak or Ash. Maple is the current production standard and the preferred repair/replacement skid material. Pre-drilled and custom fit skids are available from Cameron Balloons US for every basket. The three approved woods may be used interchangeably and are easily purchased from local suppliers. A strip of nylon or UHMW plastic of 1/2" maximum thickness may be added to the bottom edge of each skid. Stainless steel screws inserted in countersunk holes are recommended for installation.

A broken skid must be replaced unless the break is outside the outermost bolt. If the break is at or inside the outermost bolt, the skid must be replaced. Refer to Section J.11, "***Allowable Damage"*** for additional damage limits.

The skid can be removed by undoing the retaining bolts. This can only be done from underneath the basket. The skids are glued on as well, so excessive force could cause de-lamination of the plywood floor. Work carefully and from one end. Install skids with new hardware and use a good waterproof wood adhesive.

The removed skid could be used as a pattern for its replacement, including the angle of cut at the ends and the location of the bolt holes.

Replacement skids are best acquired from Cameron Balloons US and can normally be shipped the same day as ordered. Have ready the basket part number when ordering a replacement skid. Acquiring the skid material locally and fabricating the skids in the field will generally be more expensive and of lower quality than if acquired from Cameron Balloons.

J.3 SOLID FLOOR

Cracks in solid floors that are visible on both sides of the wood and are between 3" and 18" in length should be repaired by fitting a marine plywood patch to the inside of the basket floor. The patch must be of at least the same thickness as the floor and must be screwed and bonded in place. If the crack is greater than 18" the floor must be replaced.

If the anti-slip strips are worn out or damaged they should be replaced.

J.4 BOTTOM SCUFF TRIM & CABLE PROTECTION–SOLID FLOOR BASKETS

The bottom edge of the solid floor basket is fitted with rawhide. The purpose of the rawhide is to protect the bottom floor lacing and attachment pieces. The position of the rawhide should provide as much coverage and protection to the bottom edge as possible.

Scuff rawhide is 7 inch wide limed Water Buffalo rawhide. The rawhide should be soaked for several hours.

The top of the scuff rawhide is attached to the basket by a lacing method. The current method uses 1/8" polyester line, dyed to match the rawhide color, to attach the side pieces. The Solid Floor basket skuff rawhide sides are laced directly to each other with 3-4 inch overlap using rawhide lace.

The rawhide is NOT pre-punched. Punching must be done one hole at a time as the rawhide is installed. This method is used to align the holes with the spaces between rattan uprights in the basket.

The rawhide should be installed along the top edge first.

A) SCUFF RAWHIDE TOP EDGE LACING:

Begin just under the lowest layer of colored weave.

Punch the lacing holes in the rawhide about 3/8" from the outer edge. The 3/8" at the edge of the rawhide will prevent the lacing from tearing out after the rawhide has dried. The 3/8" will also enable you to tuck the edge of the rawhide into the weave (use a tool such as a dull screwdriver).

1) Tie one end of the polyester lace around an upright or horizontal tri-weave.

2) Place the rawhide piece on the basket. Support both ends of the rawhide piece.

3) Punch the first hole directly above the tie off.

4) Insert the lace through the hole from the back side of the rawhide, up and through the space between the two uprights directly above the hole and into the basket. The lace must pass between the dyed weave row and highest tri-weave row.

5) Guide the lace around the inner side of the upright and pull the lace through the adjacent upright space. The lace must pass between the dyed weave row and highest tri-weave row.

6) Punch the next hole half way between the next two adjacent uprights. Insert the lace through the hole from the back side of the rawhide, up and through the space between the two uprights directly above the hole and into the basket. The lace must pass between the dyed weave row and highest tri-weave row. Pull the lace tight. Tuck the rawhide edge between the rows of weave.

7) Repeat steps (4) through (6) until the side top is complete.

8) This method is suitable for the basket end top as well.

B) SCUFF RAWHIDE BOTTOM EDGE ATTACHMENT:

Pull the rawhide down as far as it will go, usually about 3 inches onto the floor of the basket, but leave it loose as it will shrink tight when it dries.

Use double rows of 1/2" staples closely spaced to staple the rawhide to the basket floor.

C) RAWHIDE CABLE PROTECTION:

The cable protection rawhide is 4 1/2 inches wide.

Center the rawhide strip over the basket suspension cable.

Use double rows of 1/2" staples closely spaced to staple all exterior edges of the rawhide to the basket floor.

Next, while keeping the cable centered in the rawhide, use double rows of 1/2" staples to staple on both sides of the cable.

J.5 VERTICAL WICKER ("UPRIGHTS") REPAIR

There are two types of vertical uprights, the standard uprights and the reinforcing uprights.

Broken reinforcing vertical uprights **must** be replaced before further operation. If a reinforcing upright which forms the step hole or which the tank belts bear is broken at any point, the upright **must** be replaced.

Broken standard vertical uprights **must** be repaired at the next Annual/100 hour inspection, however, broken standard uprights directly below the step hole **must** be repaired before further operation. Broken standard vertical uprights may be repaired and reinforced with 3/8" nylon rod. The rod should extend six inches above and below the damaged area.

If a standard upright that is directly adjacent to a belt hole is broken, it **must** be repaired before further operation.

A) REPAIR STANDARD UPRIGHTS WITH NYLON ROD:

1) Sharpen the rod slightly on one end to ease installation.

2) Spray the rod and the repair area with silicone lubricant.

3) Insert the rod 6 inches or more above the damaged area and drive the rod along the broken vertical member until it reaches the desired location and both ends are inside the weave.

If an excessive amount of standard vertical uprights are damaged (Refer to Section J.11, ***"ALLOWABLE DAMAGE"***) **or** the damage is done in such a way that reinforcement with nylon rod is not acceptable the vertical uprights **must** be removed and replaced.

B) REPAIR BY REPLACEMENT:

1) Remove the top bolster in the area above the damaged uprights.

2) Remove the stainless steel Bandit™ clamps as necessary.

3) Remove the top frame is necessary.

4) Remove the rawhide scuff leather as necessary.

5) Remove enough of the tri-weave to gain access to the broken upright and bottom frame.

6) Pull the vertical uprights out with a vise grip type tool and hammer. This method is aided by the use of silicon spray lubricant.

7) Drive a new piece of the correct size rattan into place until it bottoms out against the bottom frame, this method is aided by the use of silicone spray.

8) Install a 4" long 3/4" wide piece of rawhide between the bottom frame and the basket floor with equal lengths on each side of the bottom frame. Staple the rawhide to the uprights on the inside and outside of the basket

9) Replace the tri-weave.

10) Replace the rawhide scuff leather

11) Replace the top frame if it was removed.

11) Install NEW Bandit™ clamps or Cameron supplied heavy-duty wire ties. The Bandit™ installation tool is available for loan from Cameron Balloons U.S.

12) Replace the top bolster.

J.6 HORIZONTAL WEAVE REPAIR

Sections of horizontal weave may be replaced with rattan of a similar size.

Cameron Balloons US baskets are made primarily of a "natural" rattan (i.e. one that does **not** have its natural outer skin removed). Small quantities of stripped rattan ("round reed") are used for accenting stripes. The stripped rattan is easily dyed using common Rit™ dye. The stripped rattan is more brittle and is not as strong as the natural rattan (with natural cover) and should not replace the natural rattan in repair work.

When replacing horizontal weave it is important that the new woven piece be at least 12" long. Pieces shorter than 12" will not span enough vertical members to remain properly positioned in use.

In the Aristocrat style basket the ends of horizontal weave may be turned down as is standard or overlapped in-between two vertical uprights as on a Sport Basket.

J.7 TOP BOLSTER PATCHING

Repairs may be made to the top bolster (suede, smooth leather or cordura) by cementing a patch with contact cement on the underside of the damaged area (Goodyear's Pliobond™ contact cement works especially well for this). In the case of a tear it should be possible to bring the edges together. The reinforcement piece placed under the bolster material should extend at least 1/2" beyond the damaged area in all directions.

Suede may be rejuvenated with the use of commercially available suede brushes and suede stones. It is our experience that dry cleaning solvents and soaps should be avoided as they remove the oil in the suede, discoloring and hardening it. Shoe polish, mink and neat's-foot oil type treatments work well on **smooth** leather. Cordura can be washed with a mild soap solution, rinsed with clear, hot water and allowed to dry before covering.

J.8 REPLACEMENT OF BASKET CABLES

The stainless steel cable woven through the basket may be spliced or replaced. Replacement is the preferred repair.

CAUTION:
Before starting this process, contact Cameron Balloons US for information on swaging. The necessary tools **MUST** be borrowed from Cameron Balloons US on a loan basis and the proper parts purchased.

A) CABLE REPLACEMENT:

1) Remove the center skid.

2) Remove the pressed on ferrule from the cable, which is located under the center skid. This can be accomplished by cutting the cable on both sides of the ferrule.

3) Slide a new Nicopress ferrule onto the new cable. Secure the ferrule at the mid-way point of the cable with tape.

4) Butt weld an appropriate length of new 6mm stainless steel cable to the ends of the cable where the ferrule was removed.

5) Place heavy weight (sand bags etc.) inside the basket near the corner where the cable will first be pulled from.

6) Pull one side of the old cable with an overhead hoist or block and tackle until the mid-point of the new cable is in the center of the basket floor. Silicone spay lubricant will help in this step.

7) Repeat number 5 and six for the other half of the cable.

8) Swage the Nicopress ferrule at a position where it will fit in the notch in the center skid.

9) Install the skid using new hardware.

10) Install new vinyl cable covering.

11) Cut, thimble and swage the cables to the correct length.

J.9 ROPE AT TOP AND BOTTOM OF BASKET

The rope used for the internal passenger handholds and external carrying handles is a 3/4" polypropylene which, for aesthetic reasons, has been colored and finished to have the appearance of natural Manila rope.

The woven rope handles are constructed with three individual strands twisted together. The area between handles is comprised of two strands. The two strand weave runs completely around the basket and only in the actual handle is the third strand incorporated.

A) SPLICING THE TWO STRAND WEAVE:

1) Separate the coiled three strands into three separate pieces.

2) Start at least two vertical uprights from the nearest handle, farther away from the break if possible. Allow six inches of extra rope at the start of the splice (this will later be fused to the existing rope).

3) Use two strands to reconstruct the existing pattern of rope weave. This is best done with two people, one inside and one outside the basket, to facilitate feeding the rope back and forth into and out of the basket between the uprights and through the weave.

J.10 FORMING A HANDLE

A handle is formed by introducing the third strand of rope at the point where the handle extends from the basket wall.

A) FORMING A ROPE HANDLE:

1) Begin with the two rope weave on the inside of the basket so the melted splice is not visible from the outside. It is also preferable to start the weave behind a tank location.

2) The two strand weave rope will be joined by the third independent strand to form the handle. The two strands of the two strand rope weave exit the basket interior and are separated by the handle-edge upright.

3) The third strand is now introduced. Begin at a point approximately six inches from the end of the independent third rope strand.

4) Twist the independent third strand into the first two strands until the length needed for the handle is attained (in production this is 15 twists of three strand).

5) One of the original two strands enters the basket interior through the space between the second and third upright from the original handle starting point, while the second rope strand remains on the exterior..

6) The third rope strand should have a tail about six inches long remaining and "sticking up" after one of the original two rope strands have re-entered the basket. The two original rope strands will continue around the basket.

7) The two 6 inch end pieces of the third rope strand can now be woven in and out of the uprights between the new handle ends to fill that area.

a) Stretch loosely the 6 inch piece of the third rope strand protruding from the handle starting point upright, along the inside of the basket to the handle ending point upright. Twist the rope handle at the ending point in such a fashion as to loosen the rope around the upright. Insert the remainder of the 6 inch piece of the third strand down and through the hole made from twisting the handle and adjacent to the upright.

b) Guide the 6 inch piece of the third rope strand protruding from the ending point upright between the ending point upright and its inner adjacent handle upright, on top of, behind and under the other third strand of rope. Apply a gentle sawing motion to center the intersection between the two uprights. Use care to prevent the rope from untwisting while cinching up the two strands.

c) Repeat step (b) for the two remaining gaps between the handle end points.

d) Twist the rope handle at original beginning point in such a fashion as to loosen the rope around the upright. Insert the remainder of the 6 inch piece of the third strand down and through the hole made from twisting the handle and adjacent to the upright.

The difference between original handle construction and repair construction is the manner in which the third strand ends are tucked into the basket. The third strand ends of the original handle ends are guided up and taped to the wicker uprights at the ends of the handles. For repairs, the ends are tucked into the adjacent two-strand weave and the ends are melted into place to prevent dislocation or fraying.

J.11 ALLOWABLE DAMAGE

GENERAL:

The following specific conditions do NOT make the balloon un-airworthy. Although operation of the balloon is allowed, it is best to repair these conditions at the earliest convenient opportunity, preferably no later than the time of the next Annual/100-hour inspection.

Consult Cameron Balloons if questions arise on the airworthiness or legality of a repair, installation or equipment damage.

A) SKIDS:

A single basket skid may be cracked: (1) if all parts of the crack are within 1/2" from an outside surface or (2) if the crack does not extend lengthwise from the end of the skid to one of the endmost skid bolts.

B) BOTTOM SCUFF RAWHIDE:

Any damage to the scuff rawhide that exposes the edge of the solid floor, the basket lower frame, the 6mm stainless steel cable or the polyester lacing that is used to lash the floor and lower frame together is **NOT PERMITTED**. This damage **MUST** be repaired before further operation.

Any other damage to the scuff rawhide MUST be repaired at the next annual/100 hour inspection.

C) CABLE PROTECTING RAWHIDE:

Cable protecting rawhide is stapled over the 6mm stainless steel cable on the outside basket floor. Any damage to the cable protecting rawhide that exposes the 6mm stainless steel cable **MUST** be repaired before further operation.

D) SOLID FLOOR

Any crack that is visible from either side of the floor (not both sides).

Any crack that is less than 3" in length

E) TOP BOLSTER:

Top bolster damage is permitted as long as the protective closed cell foam on the basket top edge remains firmly held in place.

F) UPRIGHTS:

One or two contiguous standard uprights may be broken, provided the next three uprights on both sides are not broken.

G) HORIZONTAL WEAVE:

Broken horizontal weave which does not permit an object larger than 3/4 inch in diameter to pass through the broken section is permitted.

H) BASKET SUSPENSION CABLES:

Basket suspension cables are made up of 6mm stainless steel 6x19 wire. Up to 38 total individual wire strands may be broken in the thimble area (beyond the ferrule) on any single suspension cable. Up to 19 total individual wire strands may be broken on one single basket suspension cable in any location other than the thimble area.

Damaged wire strands in the thimble area should be trimmed of any sharp protruding ends and the area covered with an epoxy cement to protect against the danger of snagging persons or other parts of the balloon. Damaged wire strands in other areas of the cable should be covered with heat shrink tubing or several layers of electrical tape to afford the same protection.

I) SUSPENSION CABLE PLASTIC TUBING COVER:

Un-repaired damage is not permitted. If damaged, the damaged section of the protective vinyl basket cable covering must be wrapped with at least 1/16" thickness of **electrical** tape or heat shrink tubing, to at least 1" beyond the damaged area in each direction.

J) TOP & BOTTOM FRAMES:

Slight to moderate bends are permitted to the top frame & bottom frame as long as all bends are smooth and there are no cracks, creases or kinks present.

Safari skids (''Appendix Z'')

APPENDIX Z
SAFARI SKIDS

GENERAL DESCRIPTION:

Safari skids are installed on the basket to protect the wall and bolster from damage. Safari skids are attached to the outside and down wind long side of the basket. Safari skids may be installed on any size Cameron Balloons U.S. manufactured basket.

Safari skid installations are an Owner/Operator maintenance procedure. The installation must be recorder in the maintenance log.

Instructions for Continued
Airworthiness, Issue 3

Appendix Z
Safari Skids

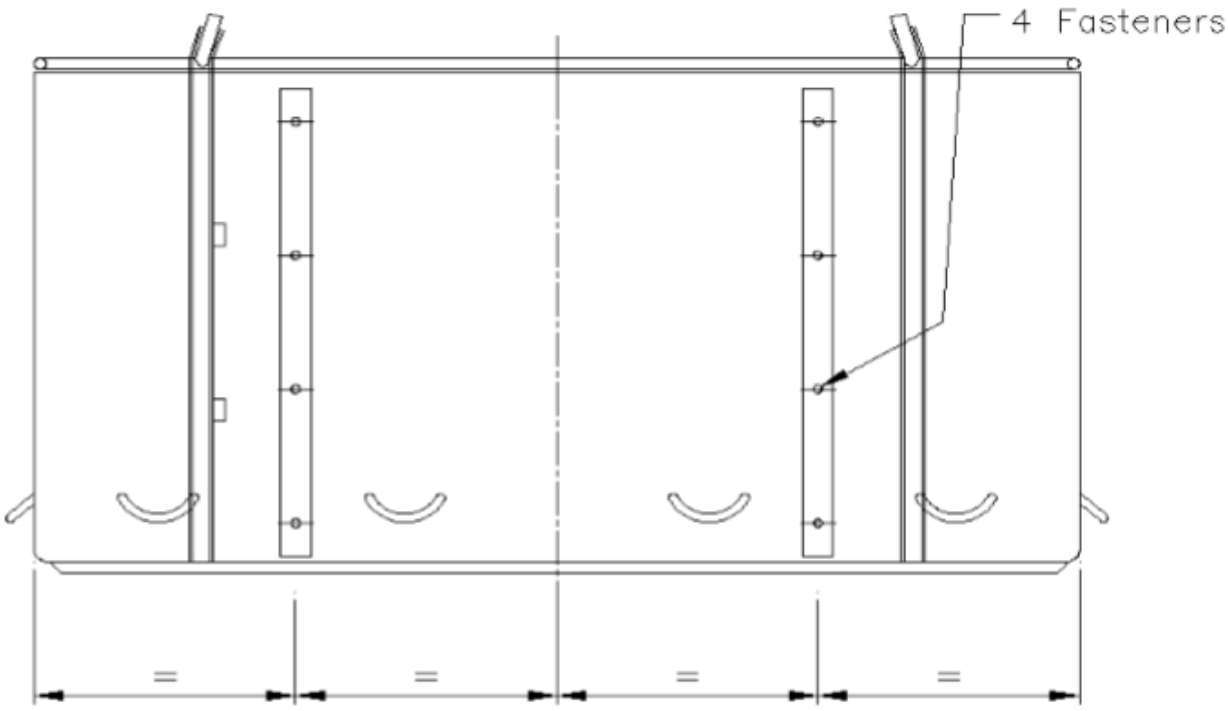

Skid Positions for ALL Open baskets &
Alpha I – Alpha II – Alpha Plus – Wheelchair

November 01, 2016

Page 2 of 6

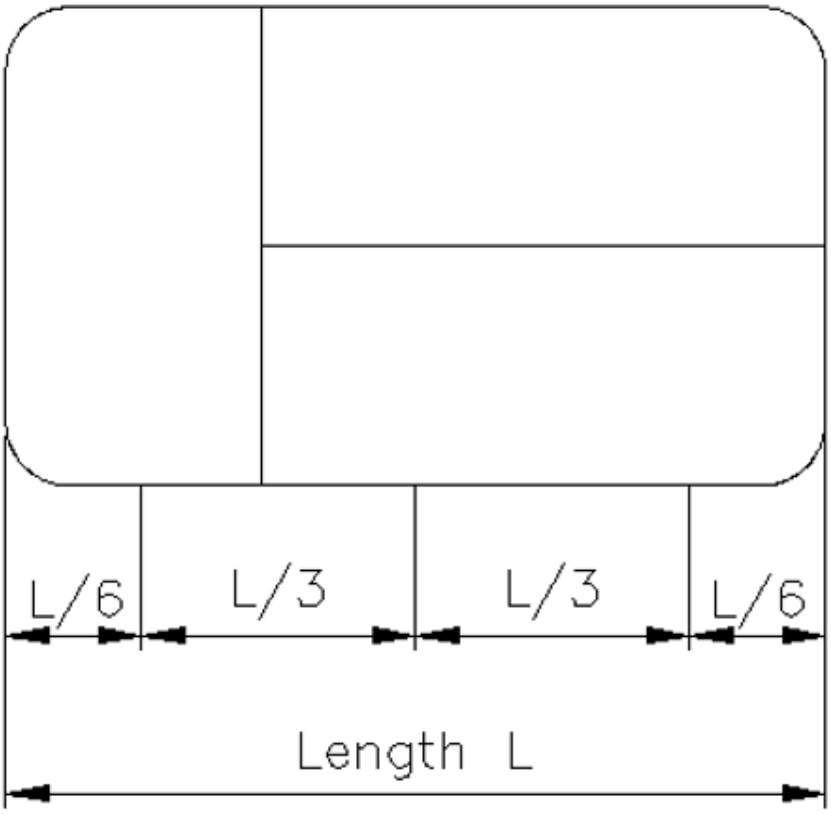

Skid Positions for T baskets
Bravo – Bravo Plus
Delta 1 – Delta 1 Plus

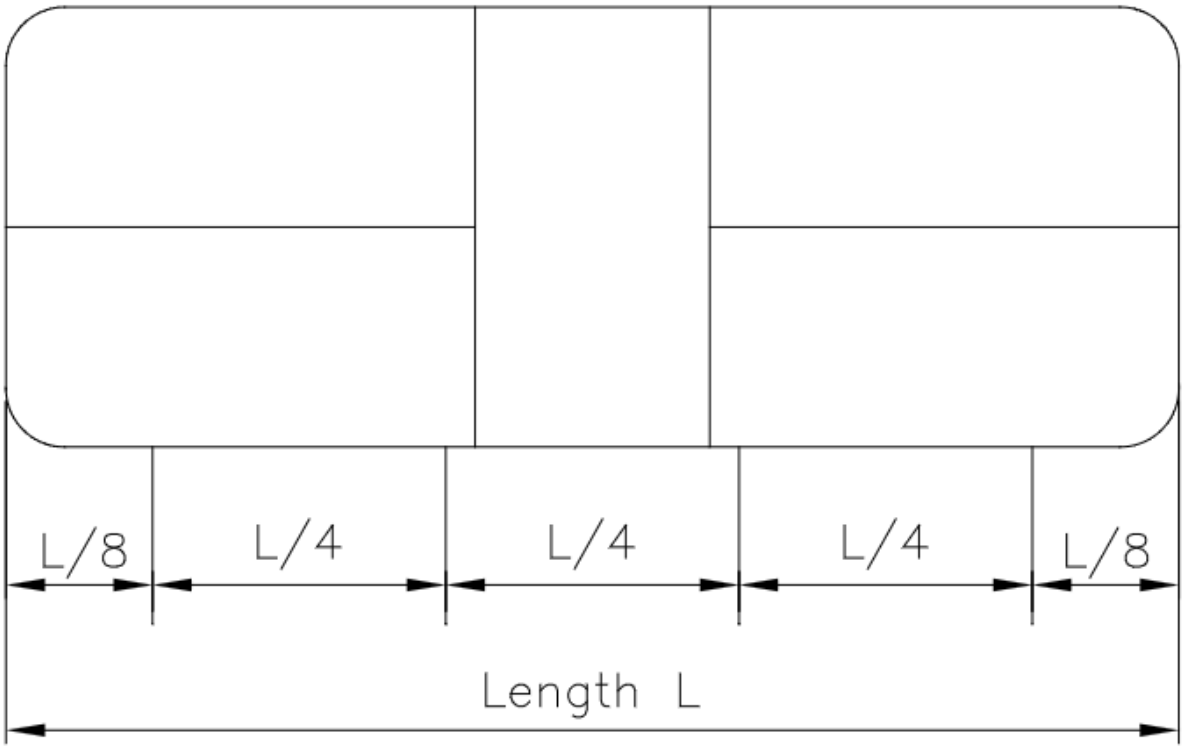

Skid Positions for ALL Double T Baskets
(see note 4)

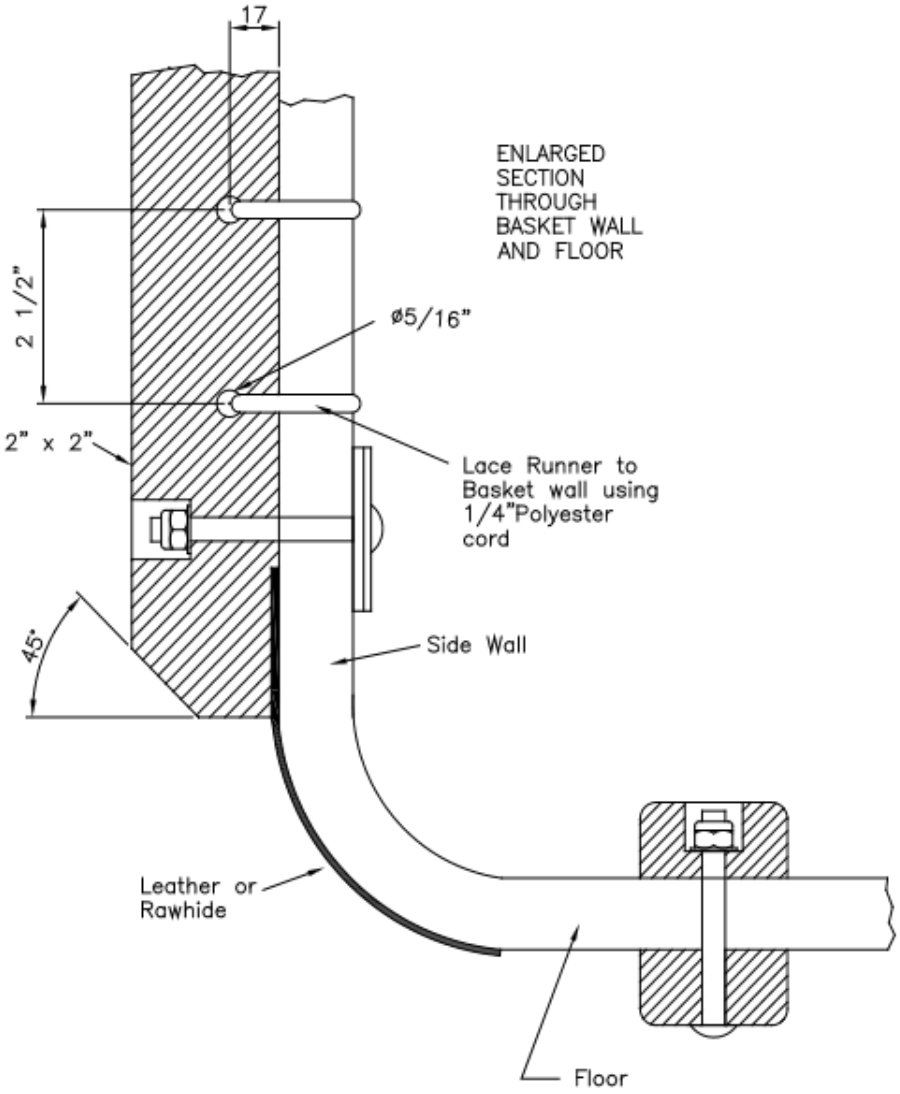
17
ENLARGED SECTION THROUGH BASKET WALL AND FLOOR
2 1/2"
ø5/16"
2" x 2"
Lace Runner to Basket wall using 1/4"Polyester cord
45°
Side Wall
Leather or Rawhide
Floor

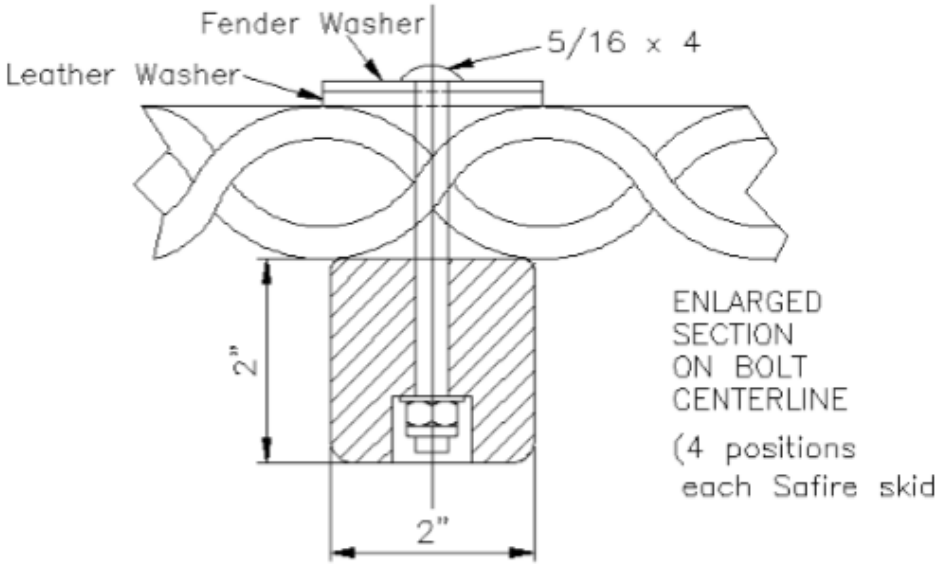
Fender Washer
5/16 x 4
Leather Washer
2"
2"
ENLARGED
SECTION
ON BOLT
CENTERLINE
(4 positions
each Safire skid

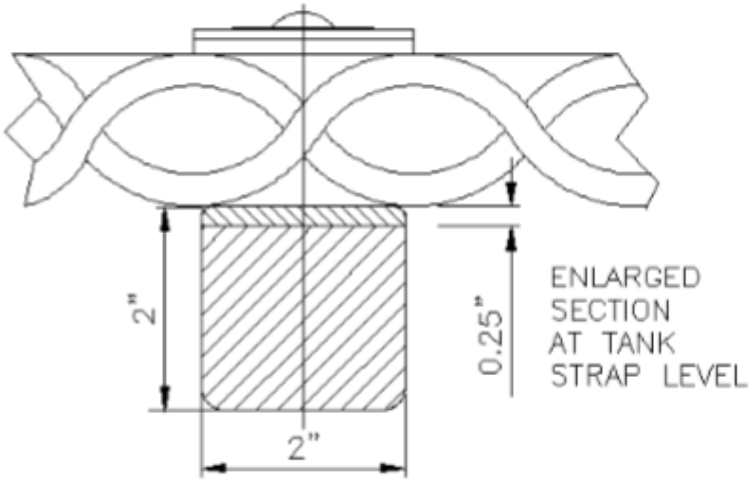
2"
2"
0.25"
ENLARGED
SECTION
AT TANK
STRAP LEVEL

APPENDIX 6 – BURNERS – additional information

Sirocco burner (''Appendix G'')

SIROCCO BURNER

A) PREVENTIVE MAINTENANCE, in addition to that listed in Section 2.4:

1) Lubrication of the Main Blast Valve through the lubrication port. The main blast valve should be lubricated through the port every 10 hours of flight time. See Section E 1.

2) The pilot light inlet filter may be removed and cleaned. See Section H.

B) REQUIRED MAINTENANCE at Annual/100 hour Inspections:

1) Blast valve stem O-ring replacement is NOT a required Annual/100 Hour Inspection procedure. The O-rings must be replaced only if damaged. However, the blast valve must be disassembled, all internal parts cleaned and inspected and the valve stem o-rings lubricated with silicone grease. See Section E.

2) The pilot light inlet filter must be cleaned. See Section H.

3) The pilot light outlet jet and filter must be cleaned. See Section G.

4) The pilot light regulators must be disassembled, cleaned and inspected. See Section G.

C) HANDLE:

The Sirocco is available with two types of handle. One is the 'Cross Bar Handle' and the other is the 'Dual Action Handle'. The 'Dual Action Handle' enables both burners to be operated with one hand.

1) HANDLE REMOVAL - DUAL ACTION:

See Figure G 1

a) Use a large Philips screwdriver to remove the handle retaining screws.

b) Move the blast valve handles as necessary and remove the Dual Action Handle.

2) HANDLE REMOVAL - CROSS BAR:

See Figure G 2

a) Use a 3mm hex key to loosen the crossbar retaining set screws.

b) Move the blast valve handles to the locked on position.

c) Use a 4mm hex key to remove the end cap retaining bolts located underneath the blast valve handles.

d) Move the blast valve handles as necessary to remove the cross bar handle.

D) MANIFOLD BLOCK:

1) GENERAL:

The manifold block assembly consists of three independent liquid valves, supplied by one common inlet. The first valve, The Blast Valve, supplies fuel to the vaporizing coil. The second valve, The Whisper Valve, supplies fuel to the Whisper Jet. The third valve supplies fuel, via a filter and vaporizer/regulator, to the pilot light.

Each manifold block has its own pressure gauge and piezo igniter.

Each manifold block may be easily removed from the burner assembly for maintenance.

2) MANIFOLD BLOCK REMOVAL:

See Figure G 1 or G 2.

a) Remove the Dual Action Handle or Crossbar Handle.

b) Use a 4mm hex key to remove the three manifold block retaining screws and spring washers.

c) Remove the manifold block by gently pulling it directly away from the coil and jet ring assembly.

3) MANIFOLD BLOCK ASSEMBLY:

a) Inspect the condition of the O-rings at the base of the coil center column and insure the O-rings are lubricated.

b) Insure the Manifold Block is in the correct orientation. Gently slide the blast valve sleeve over the coil center column and align with the holes for the manifold locating screws. Insert the spring washers and socket head screws and tighten. The three manifold block retaining screws and the cross head screws retaining the dual action handle (if fitted) should be assembled with a thread locking compound (Loctite 242 or 243).

NOTE
It is important to insure that the handle assembly is correctly aligned and that clearance is maintained between the blast valve handle and the crossbar end cap.

E) BLAST VALVE:

1) LUBRICATION THROUGH THE LUBRICATION PORT:

See Figure G 3.

a) Use a flat bladed screwdriver to remove the Blast Valve Lubrication Screw.

b) Spray silicone lubricant into the lubrication hole.

c) Insure the lube port screw o-ring is not damaged, is lubricated and is snug against the lube screw head. Install the lube port screw.

d) Check the valve for correct operation.

2) BLAST VALVE BONNET REMOVAL – DUAL ACTION HANDLE:

a) Remove the handle. See Section C 1.

See Figure G 4.

b) Lift off the Outer Anti-friction washer and the dual action lever.

c) Lift off the inner friction washer and remove the spring located beneath it.

d) Use a 4mm hex key to remove the three socket cap screws retaining the blast valve bonnet assembly.

e) Remove the bonnet assembly from the manifold block.

3) BLAST VALVE BONNET REMOVAL – CROSSBAR HANDLE:

a) Remove the handle. See Section C 2.

See Figure G 5.

b) Lift off the anti-friction washer and remove the spring located beneath it.

c) Use a 4mm hex key to remove the two bolts retaining the blast valve bonnet assembly and remove it from the manifold block.

4) BLAST VALVE STEM & O-RING MAINTENANCE:

See Figure G 5.

a) Remove the valve stem, spring and stainless steel washer from the valve bonnet.

b) Clean the stem with a soft cloth.

c) Inspect the O-rings and seal pad for damage.

d) If the O-rings are damaged they must be replaced.

e) If the stem or seal pad are damaged, the stem must be replaced.

f) Lubricate the stem and O-rings with silicone grease.

5) BLAST VALVE BONNET MAINTENANCE:

See Figure G 5.

a) Remove and inspect the two O-rings and PTFE spring seal from the upper face of the bonnet. Replace if damaged.

b) Remove the lubrication port screw and inspect the O-ring. Replace if damaged.

c) Clean and inspect the bonnet for wear and scoring in the bonnet bore.

d) Lightly lubricate the spring seal and O-rings.

e) Insure that the spring seal has the open face away from the bonnet with the spring visible.

f) Replace the Lubrication port screw.

6) BLAST VALVE SLEEVE MAINTENANCE:

See Figure G 5.

a) Remove, clean and inspect the O-rings.

b) Clean and inspect the sleeve for wear and scoring in the coil center column location bore.

c) Lightly lubricate and assemble the O-rings.

7) BLAST VALVE BONNET RE-ASSEMBLY:

See Figure G 5.

a) Assemble the valve spring and stainless steel washer to the valve stem.

b) Carefully insert the lubricated valve stem into the valve bonnet.

8) BLAST VALVE BONNET/SLEEVE RE-ASSEMBLY TO THE MANIFOLD BLOCK:

See Figure G 5.

a) Fit the bonnet and sleeve to the manifold block.

b) Install the two hex head bolts and tighten.

c) Fit the anti-friction washer(s), lever (if fitted) and spring.

d) Fit the Blast Valve handle and retaining in.

F) WHISPER VALVE:

1) REMOVE THE MANIFOLD BLOCK FROM THE BURNER:

a) See Section D 2.

2) REMOVE THE WHISPER VALVE FROM THE MANIFOLD BLOCK:

See Figure G 6.

a) Use a 26mm wrench to undo the Whisper Valve sleeve.

b) Remove the sleeve from the upper surface.

c) Remove the bonnet, stem assembly and handle from the lower surface.

3) DISASSEMBLY OF WHISPER VALVE BONNET AND STEM ASSEMBLY:

See Figure G 6.

a) Use a 5mm hex key to loosen the valve handle.

b) Use a flat blade screwdriver to turn the stem in a clockwise direction until the stem separates from the handle.

c) Remove the valve stem, valve shutter and spring from the valve bonnet.

4) WHISPER VALVE STEM MAINTENANCE:

See Figure G 6.

a) Clean and inspect the stem, stem O-rings and Shutter.

b) If the Shutter or O-rings are damaged they must be replaced.

c) Lubricate the stem and O-rings with silicone grease.

5) WHISPER VALVE BONNET ASSEMBLY MAINTENANCE:

See Figure G 6.

a) Inspect the O-ring from the upper face of the bonnet. Replace if necessary.

b) Inspect the bonnet bore for wear and scoring.

6) WHISPER VALVE SLEEVE ASSEMBLY MAINTENANCE:

See Figure G 6.

a) Remove and inspect the O-ring.

b) Clean the sleeve.

c) Inspect the sleeve for wear, scoring and thread integrity.

d) Check that the jet plate is secure.

7) WHISPER VALVE RE-ASSEMBLY:

See Figure G 6.

a) Assemble the valve spring and valve shutter to the valve stem.

b) Insert the lubricated valve stem into the valve bonnet.

c) Use a flat blade screwdriver to turn the valve stem in an anti-clockwise direction until the base of the stem is parallel with the base of the handle.

d) Use a 4mm hex key to temporarily re-tighten the handle.

e) Insert the bonnet assembly in the base of the manifold block. Insure that the spring pin is in its location hole.

f) Install the whisper valve sleeve to the bonnet and tighten.

g) Install the manifold block and handle to the burner.

8) WHISPER VALVE ADJUSTMENT:

See Figure G 1 or G 2.

If the valve fails to turn on or shut off satisfactorily, it may be adjusted as follows:

a) Turn the whisper valve handle to the open position.

b) Loosen the whisper valve handle bolt with a 5mm hex key. The threaded valve stem has two flats that are parallel with the screwdriver slot.

c) Use a flat blade screwdriver (5mm blade) to turn the stem of the whisper valve 1/2 turn clockwise (in) if the valve is not shutting off or 1/2 turn counter-clockwise (out) if the valve is not turning on.

d) One of the flats on the stem should now be perpendicular to the valve handle.

e) Tighten the valve handle screw against the flat ONLY, not the threads.

f) Check the action of the valve and repeat as necessary.

NOTE:
The valve handle should have approximately 15° to 20° of free movement before the valve opens.

G) PILOT LIGHT AND REGULATOR:

1) REMOVE THE MANIFOLD BLOCK FROM THE BURNER:

a) See Section D 2.

2) PILOT LIGHT FLAME TUBE, REGULATOR HEATER & REGULATOR DISASSEMBLY:

See Figure G 8 through G 10

a) Note the relative position of the regulator heater with regard to the other components of the burner.

b) Use a 3mm hex key to undo and remove the pilot light flame tube.

c) Use a 4mm hex key to undo and remove the pilot light regulator heater.

d) Restrain the regulator lower body.

e) Use a 26mm wrench to remove the regulator upper body.

f) Carefully remove the piston assembly and spring from the upper body.

g) Remove the brass support ring from the regulator bore.

h) Remove the jet from the housing.

i) Remove the regulator outlet filter and spring from the housing.

3) FLAME TUBE AND HEATER MAINTENANCE:

See Figure G 9 through G 10

a) Mark the upper and lower flame tube to insure that the alignment can be recreated during re-assembly.

b) Remove the upper flame tube retaining screw and disassemble the upper and lower flame tube and gauze.

c) Thoroughly clean the upper and lower flame tubes.

d) Inspect the gauze and internal mesh in the lower flame tube. If either is damaged they must be replaced.

e) Inspect the heater for signs of erosion or overheating. The length of the heater rod should be 150mm.

f) If the rod must be replaced, the socket head cap screw should be treated with Loctite 270 or equivalent thread locking compound before tightening.

4) FLAME TUBE AND HEATER REASSEMBLY:

See Figure G 9 through G 10

a) Re-assembly is the reverse order of removal. Check the alignment of the components before installing the manifold block to the burner.

5) PILOT LIGHT REGULATOR MAINTENANCE:

See Figure G 9.

a) Carefully clean the support ring and the inside of the regulator with a soft lint free cloth.

b) Inspect the piston sealing O-ring.

c) Carefully clean the piston with a lint free cloth. If the housing or piston are heavily soiled they may be cleaned with solvent.

d) Inspect the piston stem O-ring and seal, replace as necessary.

e) Inspect the outlet jet, filter and spring, replace as necessary.

6) PILOT LIGHT REGULATOR RE-ASSEMBLY:

See Figure G 9.

a) Install the jet, outlet filter and spring in the housing. Make sure the spring is under the filter.

b) Lightly lubricate the piston sealing O-ring with silicone spray.

c) Install the brass support ring.

d) Lightly lubricate the piston stem O-ring with silicone spray.

e) Carefully install the piston in the upper body.

f) Install the spring.

g) Install the upper regulator assembly to the lower body.

7) PILOT LIGHT FLAME TUBE & REGULATOR HEATER RE-ASSEMBLY:

See Figure G 8 through G 11

a) Fit the heater to the regulator upper body but do not tighten the bolt.

b) Use a 3mm hex key to install the flame tube.

NOTE:
Care should be taken to correctly alignment the pilot light flame tube to insure reliable operation of the piezo igniter and airflow through the coanda is not disturbed. See Figure 11. Check the igniter before the manifold is mounted to the coil/jet ring assembly.

8) PILOT LIGHT VALVE REMOVAL:

See Figure G 8.

a) Use a 26mm wrench to undo the pilot light valve sleeve.

b) Remove the sleeve from the upper surface of the manifold block.

c) Remove the valve bonnet, stem assembly and handle from the lower surface of the manifold block.

9) PILOT LIGHT VALVE AND STEM DISASSEMBLY:

See Figure G 8.

a) Use a 5mm hex key to loosen the handle bolt.

NOTE:
The threaded valve stem has two flats, parallel with the screwdriver slot. When the handle is tightened, the flats MUST align with the handle bolt.

b) Use a flat blade screwdriver to turn the valve stem in a clockwise direction until the lower ramp becomes free from the stem.

c) Remove the valve stem, valve shutter and spring from the valve bonnet.

10) PILOT LIGHT STEM MAINTENANCE:

See Figure G 8.

a) Clean the stem.

b) Inspect the stem and O-rings for damage. Replace as necessary.

c) Lubricate the stem and O-rings with silicone grease.

11) PILOT LIGHT VALVE BONNET ASSEMBLY MAINTENANCE:

See Figure G 8.

a) Remove and inspect the O-ring from the upper face of the bonnet.

b) Clean the bonnet.

c) Inspect the bonnet bore for wear and scoring.

d) Lightly lubricate the O-ring and install in the bonnet.

12) PILOT LIGHT VALVE SLEEVE MAINTENANCE:

See Figure G 8.

a) Remove and inspect the O-ring.

b) Clean the sleeve.

c) Inspect the sleeve bore for wear and scoring.

d) Inspect the sleeve threads.

e) Lightly lubricate the O-ring and install in the sleeve.

13) PILOT LIGHT VALVE RE-ASSEMBLY:

See Figure G 8.

a) Assemble the valve spring and valve shutter to the stem.

b) Carefully insert the valve stem into the valve bonnet.

c) Use a flat blade screwdriver to turn the valve stem in a counter clockwise direction until the base of the stem is parallel with the base of the handle.

d) Use a 4mm hex key to temporarily retighten the pilot light valve handle.

e) Install the valve bonnet assembly in the base of the manifold valve block. Make sure the spring pin is in its location hole.

f) Reassemble the sleeve to the bonnet and tighten.

14) PILOT LIGHT VALVE ADJUSTMENT:

See Figure G 1 or G 2.

Install the manifold to the coil/jet ring assembly.

a) Turn the pilot valve to the open position.

b) Loosen the pilot valve handle bolt with a 5mm hex key. The threaded valve stem has two flats that are parallel with the screwdriver slot.

c) Use a flat blade screwdriver (5mm blade) to turn the stem of the vapor valve 1/2 turn clockwise (in) if the valve is not shutting off or 1/2 turn counter-clockwise (out) if the valve is not turning on.

d) One of the flats on the stem should now be perpendicular to the valve handle.

e) Tighten the valve handle screw.

f) Check the action of the valve and repeat as necessary.

NOTE:
The valve handle should have approximately 15° to 20° of free movement before the valve opens.

H) PILOT LIGHT INLET FILTER:

The pilot light inlet filter is accessed via a threaded plug (inlet filter housing) in the base of the manifold block.

1) PILOT LIGHT INLET FILTER REMOVAL:

See Figure G 1 or G 2.

a) Use a large flat blade screwdriver to remove the inlet filter housing.

b) Remove the filter from the inlet housing.

2) PILOT LIGHT INLET FILTER MAINTENANCE:

a) Clean the filter with solvent or replace as necessary.

b) Inspect the housing o-ring and place it in the inlet filter housing.

c) Lubricate the o-ring with silicone grease.

3) PILOT LIGHT INLET FILTER RE-ASSEMBLY:

See Figure G 1 or G 2.

a) Replace the inlet filter housing in the manifold block and tighten.

I) PILOT LIGHT JET & OUTLET FILTER

See Figure G 8.

1) PILOT LIGHT JET & OUTLET FILTER REMOVAL

a) Remove the manifold block. See Section D 2.

b) Use a 3mm hex key to loosen the allen screw (4) and remove the pilot light flame cup.

c) The jet (1) is now visible and may be removed with a 1/4" nut-driver or wrench.

d) Invert the manifold block assembly and the filter (5) and spring will drop clear.

2) PILOT LIGHT JET & OUTLET FILTER RE-ASSEMBLY

See Figure G 8 and G 11.

a) Assembly is the reverse of the above procedure.

c) Care should be taken to insure the correct alignment of the pilot light flame tube to insure reliable operation of the piezo igniter.

d) The operation of the piezo igniter should be checked before the manifold block is assembled to the coil.

J) PRESSURE GAUGE:

1) PRESSURE GAUGE REMOVAL:

See Figure G 12.

a) Use a 7/16" and 9/16" wrench to disconnect the pressure gauge feed tube from the pressure gauge.

b) Gently bend the feed tube away from the pressure gauge fitting.

c) Use a 17mm wrench to remove the retaining nut.

d) Remove the gauge and gauge mounting plate.

2) PRESSURE GAUGE RE-ASSEMBLY:

See Figure G 12.

a) Remove and inspect the O-ring from the old gauge. Replace if necessary.

b) Lightly lubricate and install the O-ring on the new gauge.

c) Re-assemble in the reverse order. Make sure the gauge face is in the correct orientation.

K) PIEZO IGNITER:

The piezo igniter has no serviceable parts. If any part is defective it should be replaced.

1) PIEZO IGNITER REMOVAL:

See Figure G 13.

a) Remove the manifold block from the coil, See Section D 2.

b) Use a wrench to remove the piezo igniter.

c) The electrode spring and insulting collar can now be removed.

2) PIEZO IGNITER INSPECTION AND TESTING:

a) The operation of the piezo igniter unit can be checked by operating the unit adjacent to any metal surface to see if a spark is produced.

b) The electrode and insulting collar should be checked for damage.

3) PIEZO IGNITER RE-ASSEMBLY:

See Figure G 13.

a) Re-assemble in reverse order.

> **NOTE**
> For ease of assembly it is recommended that the burner be held in the vertical position with the coil pointing upwards. The components can then be balanced on top of the igniter unit before insertion.

L) JET RING:

1) GENERAL:

The jet ring is formed from an annular 'U' section outer into which the inner jet ring locates. Two annular foils are located between the inner and outer sections which effectively control the nozzle area. In addition, the inner jet ring is equipped with nine metal strips, which, when operating with low fuel pressure, deflect to open nine auxiliary nozzles. This maintains power output at low fuel pressures.

> IMPORTANT:
> The jet ring assembly and supports should be marked with a felt tipped pen prior to disassembly. This will insure the burner is rebuilt in the correct orientation. This operation should be repeated before splitting the inner and outer jet ring and removing the inner jet ring from the coil.

2) JET RING DISASSEMBLY:

a) Remove the manifold block assembly from the burner. See Section D 2.

See Figure G 14.

b) Use a 8mm wrench to remove the 6 brass nuts which attach the upper jet ring to the lower jet ring.

c) Use a 4mm hex key to remove the three hex bolts that attach the outer jet ring and support assembly to the outer jet ring support.

d) Remove the outer jet ring and support assembly from the burner.

> **NOTE:**
> It may be necessary to lightly tap the jet ring retaining bolts with a soft faced hammer to free the lower jet ring from the upper jet ring.

e) Use a 4mm hex key to remove the six hex bolts attching the inner jet ring to the coil.

3) INNER JET RING MAINTENANCE:

a) Use a large Philips screwdriver to remove the metal strips from the inner jet ring.

b) Clean the inner jet ring.

c) Install the metal strips. Use Loctite 222 or equivalent.

> **NOTE:**
> Insure the metal strips are installed with the part designation (i.e. the writing) facing away from the jet ring.

d) Use a 0.1mm feeler gauge to check around the free edges of each metal strip to insure correct sealing of the strips. It should not be possible to insert the feeler gauge underneath the strip.

If any strip fails the above test it may be removed and gently hammered flat with a nylon faced hammer. The strip should can then be reinstalled and checked again.

e) Use a heat gun to gently heat (Maximum of 212° F) the base of the jet ring. The free end of the strips will visibly deflect away from the jet ring.

4) OUTER JET RING MAINTENANCE:

a) Remove and clean the inner and outer jet foils.

b) Clean the outer jet ring assembly.

c) Remove the six retaining nuts.

d) Clean the studs to remove old thread sealant.

e) Install the retaining nuts. Use Loctite 270 or equivalent.

5) COIL END FITTING O-RINGS:

a) Clean and inspect the three center column O-rings. Replace as necessary.

b) Clean and inspect the three coil to jet ring O-rings. Replace as necessary.

c) Lubricate lightly with silicone grease before installation.

6) JET RING RE-ASSEMBLY:

See Figure G 14.

a) Use a 4mm hex key to install the inner jet ring to the coil. Use Loctite 222 or equivalent.

b) Install the inner and outer jet foils in the outer jet ring and assemble to the inner jet ring. The jet foils should be protruding evenly around the inner and outer jet ring. This is best achieved by assembling the jet ring to the burner in the upright position.

c) Use an 8mm socket to install loosely the 6 brass nuts which attach the upper jet ring to the lower jet ring.

DO NOT TIGHTEN THE NUTS

d) Use a 4mm hex key to assemble loosely the outer jet ring and support assembly to the outer jet ring support.

DO NOT TIGHTEN THE BOLTS

e) Install the manifold to the burner and the handle to the manifold block.

7) TIGHTENING THE JET RING:

a) Insure the jet foils are correctly located in the jet ring. The jet foils should be protruding evenly around the inner and outer jet ring. This is best achieved by assembling the jet ring to the burner in the upright position.

b) Tighten gradually the six brass nuts on the jet ring in the following order.

Step 1 Nut #'s 1 – 3 – 5 (See Figure G 15 for nut numbering)

Step 2 Nut #'s 6 – 2 – 4

Step 3 Nut #'s 1 – 3 – 5 – 6

Step 4 Nut #'s 1 – 2 – 3 – 4 – 5 – 6

Step 5 Nut #'s 1 – 2 – 3 – 4 – 5 – 6

Step 5 should be repeated until 6 Nm (53 lb in) is obtained and there is no variation in torque detected. If a constant torque cannot be achieved, the outer jet ring stud retaining nuts should be loosened and then re-tightened until the proper torque and feel are correct.

Tightening to this valve should result in a blue flame with very little yellow flame at the annular baffle (slotted stainless steel ring).

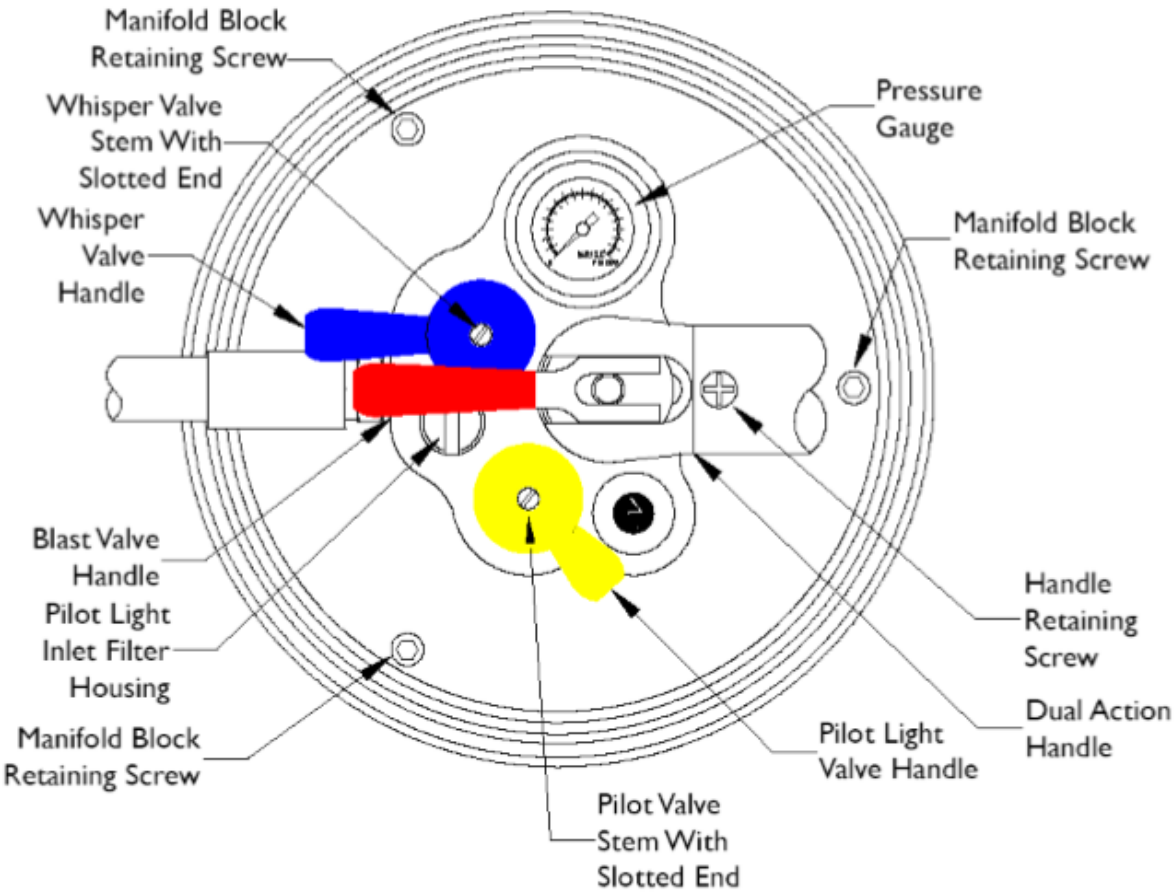

Figure G 1
Dual Action Handle

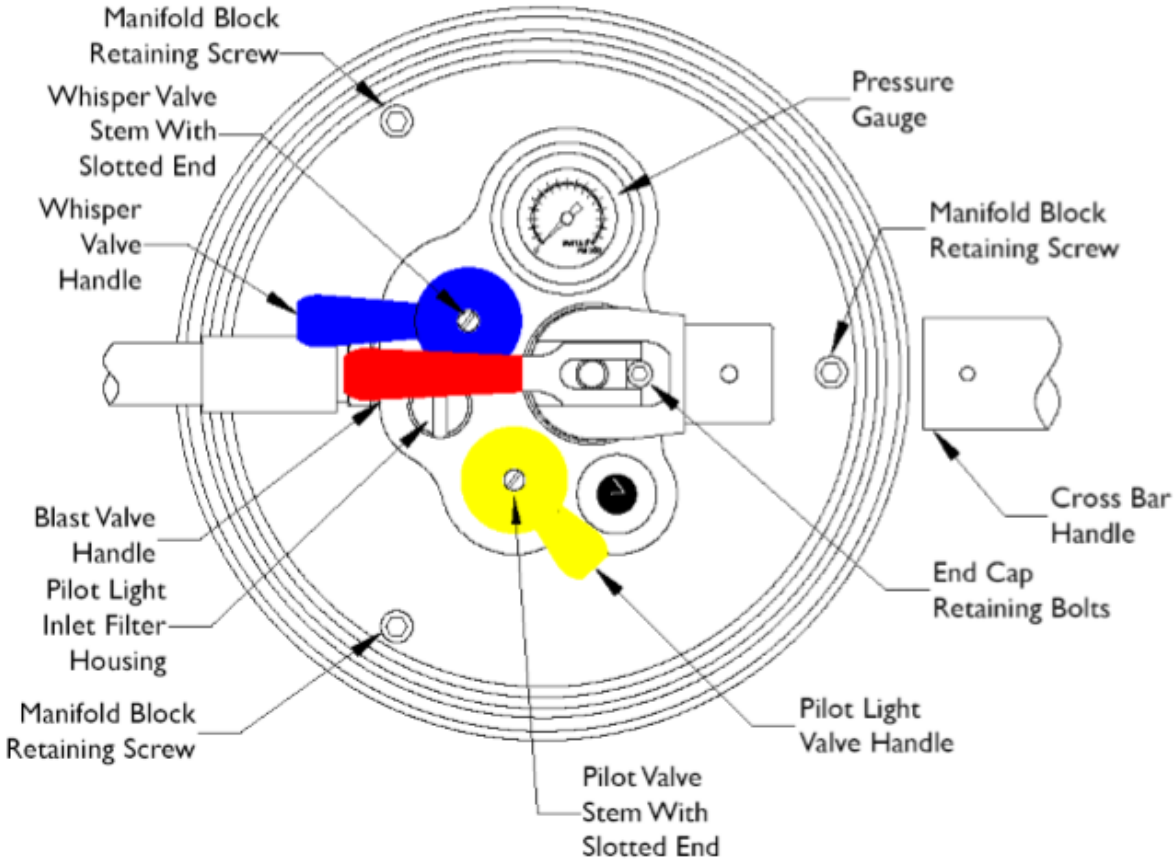

Figure G 2
Cross Bar Handle

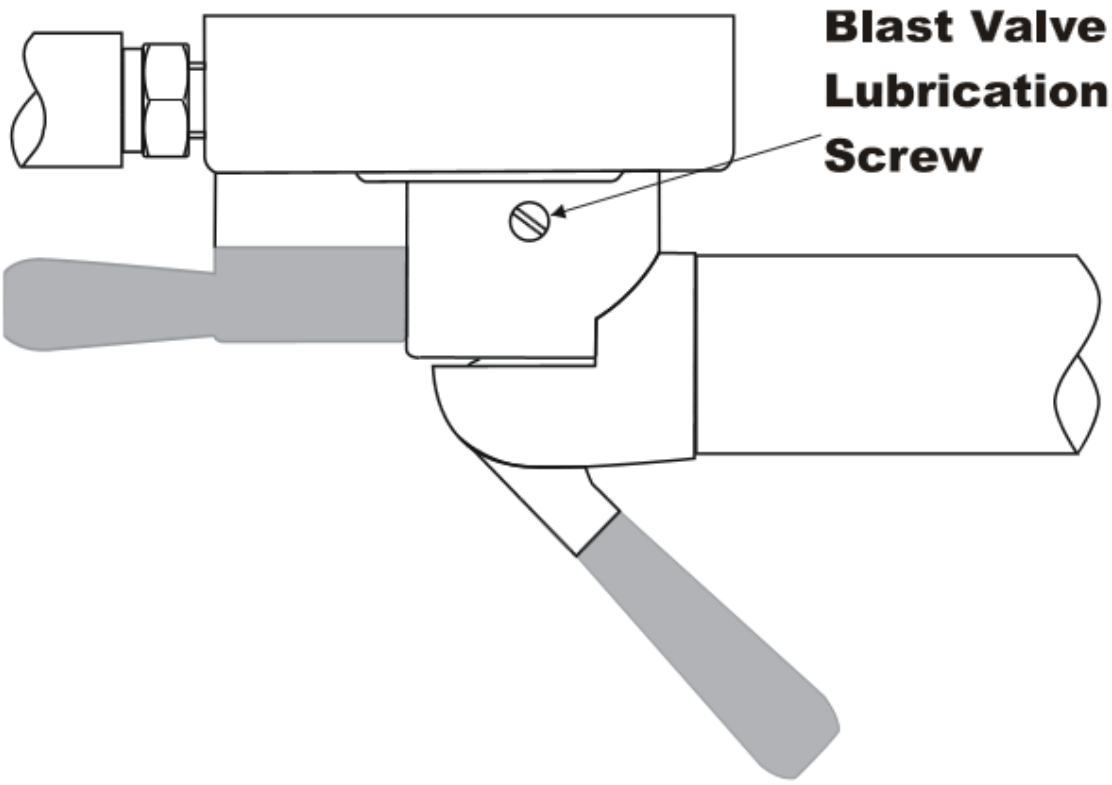
Blast Valve
Lubrication
Screw

No.	Description
1	Blast Valve – Sleeve Assy
2	Blast Valve – Stem Assy
3	Blast Valve – Spring
4	Blast Valve – Bonnet Assy Dual Action HAndle
5	M5 x 60mm Socket Cap Screw, SS
6	Blast Valve – Spring (Anti friction washer)
7	Blast Valve – Anti Friction Washer 1
8	Blast Valve – Anti Friction Washer 2
9	Dual Action Handle – Lever
10	Blast Valve – Cam
11	Blast Valve – Dowel pin
12	M8 St.St. washer
13	Dual Action Handle – Handle End Plate
14	M6 x 55mm Socket Cap Screw, SS
15	O–ring
16	Blast Valve – Handle
17	M5 x 65 Socket Cap Screw, SS

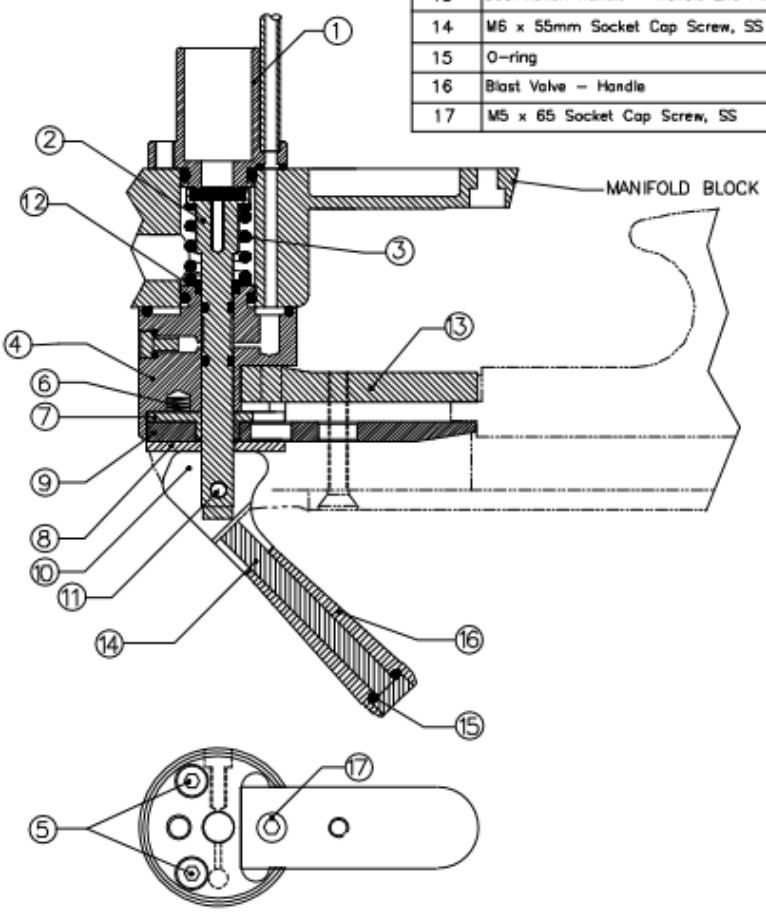

Figure G 4
Blast Valve – Dual Action Handle

No.	Description
1	Blast Valve – Sleeve Assy
2	Blast Valve – Stem Assy
3	Blast Valve – Spring
4	Blast Valve – Bonnet Assy
5	M5 x 60mm Socket Head Screw
6	Blast Valve – Spring (Anti friction washer)
7	Blast Valve – Anti Friction Washer
8	Blast Valve – Cam
9	Blast Valve – Handle
10	O–ring
11	M6 x 55mm Socket Head Screw
12	M8 St.St. washer
13	Blast Valve – Dowel pin

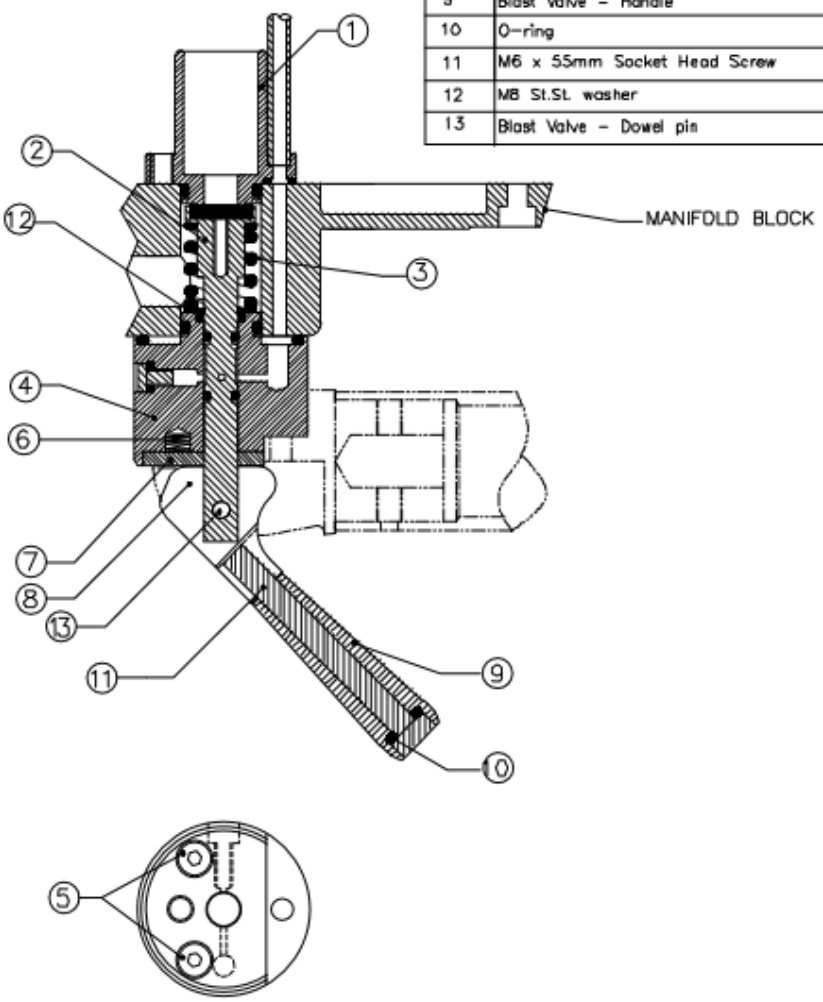

Figure G 5
Blast Valve – Crossbar Handle

No.	Description
1	Whisper Valve Sleeve Assy
2	Whisper Valve Shutter Assy
3	Whisper Valve Spring
4	Whisper Valve Stem Assy
5	O-ring
6	M6 x 40mm Socket Head Cap Screw
7	Whisper Valve Handle
8	Whisper Valve Bonnet Assy – LH
9	Whisper Valve Bonnet Assy – RH
10	Anti Friction Washer – RH
11	Anti Friction Washer – LH
12	M4 x 18mm Dowel Pin St.St.

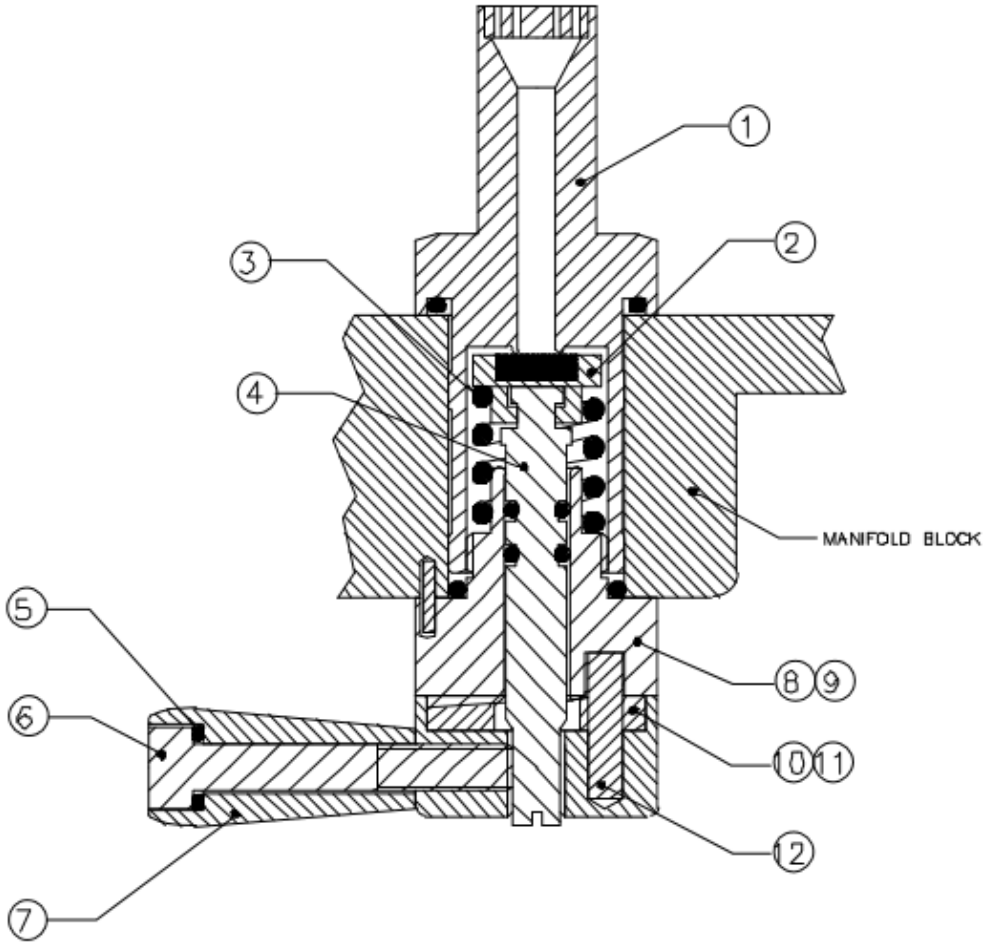

Figure G 6
Whisper Valve

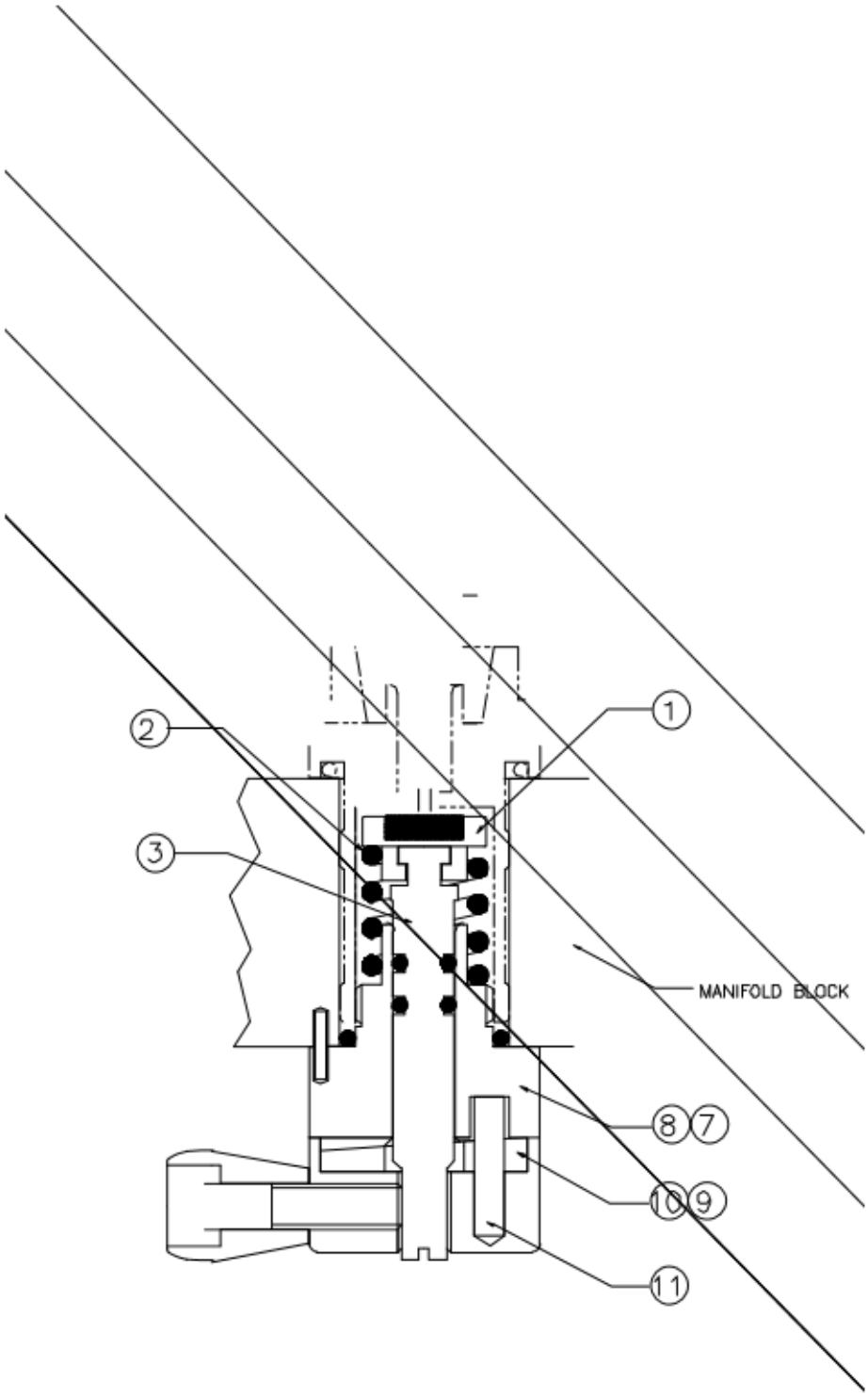
1
2
3
MANIFOLD BLOCK
8
7
10
9
11

No.	Description
1	Pilot Light Regulator – Upper Body
2	Pilot Light Regulator – Lower Body
3	Pilot Light Regulator – Piston Assy
4	Pilot Light Jet
5	Vaporiser Outlet Filter
6	Outlet Spring
7	O–Ring – Upper Body
8	Pilot Light Regulator – Inner Support Ring
9	Pilot Light Regulator – Spring
10	O–Ring

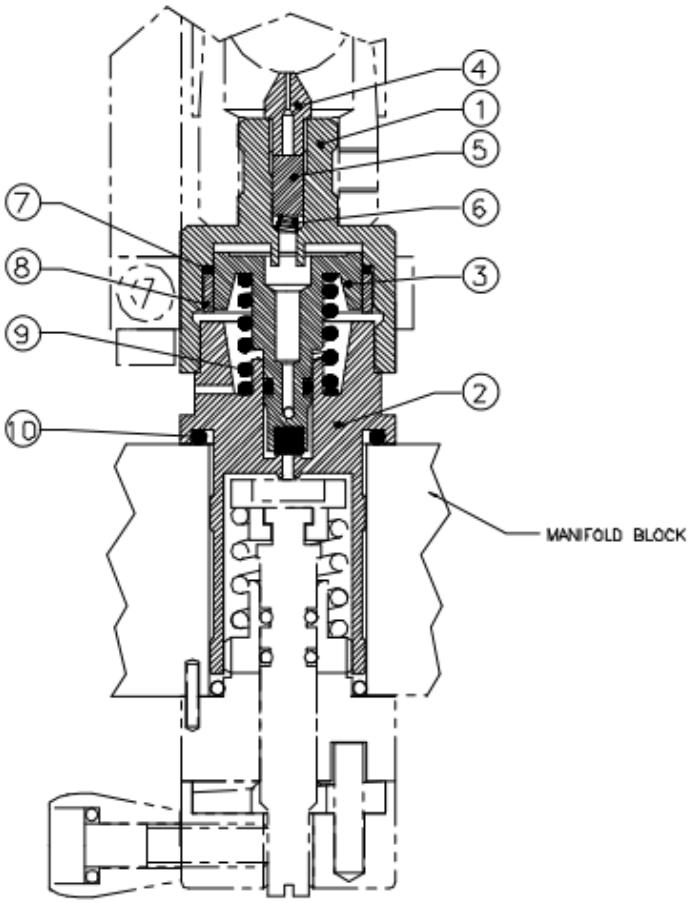

Figure G 8
Pilot Light Regulator

No.	Description
1	Pilot Light Regulator Heater – Rod
2	PIlot Light Regulator Heater – Support Ring
3	M5 x 15mm Socket Hd Screw St.St.
4	M5 x 20mm Socket Hd Screw St.St.

Notes:
1) Pilot light regulator heater rod (1) must be aligned with the air holes (A) in the flame tube as indicated

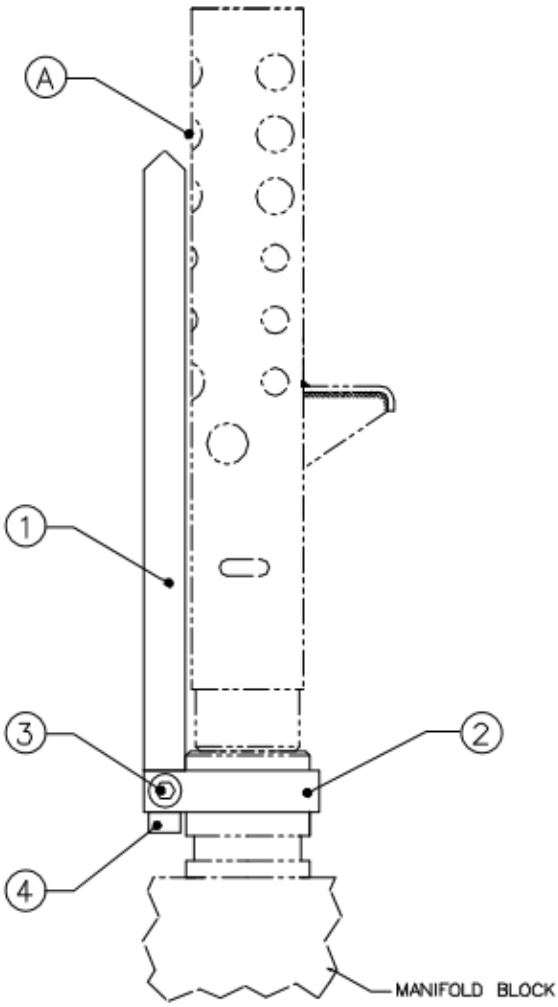

Figure G 9
Pilot Light Regulator Heater

1

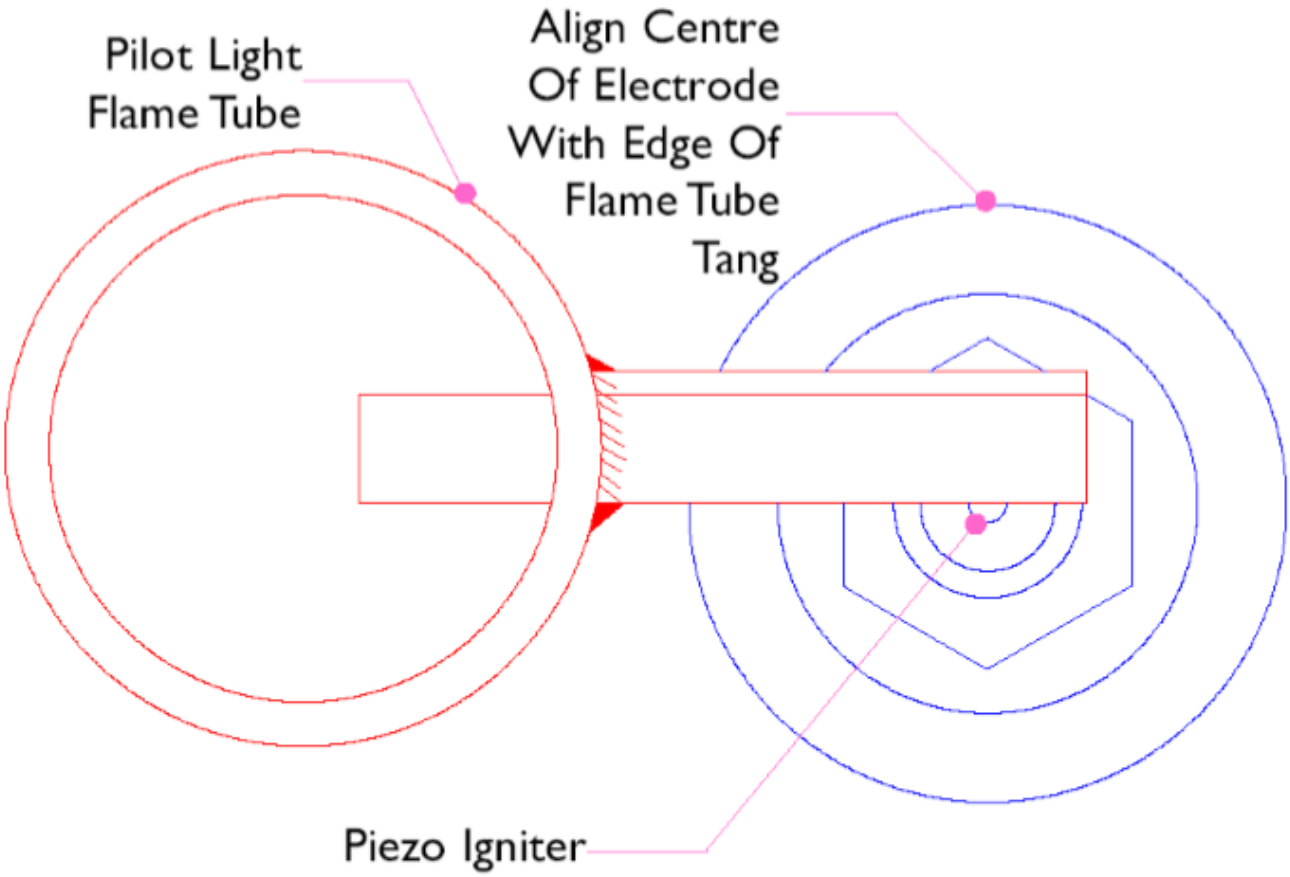

Figure G 11
Correct Pilot Light Flame Tube Alignment

No.	Description
1	Pressure Gauge (0–300psi)
2	Pressure Gauge – Mounting Plate
3	Pressure Gauge – Feed Tube
4	Connector – Feed Tube to Gauge
5	Connector – Feed Tube to Manifold
6	O–Ring

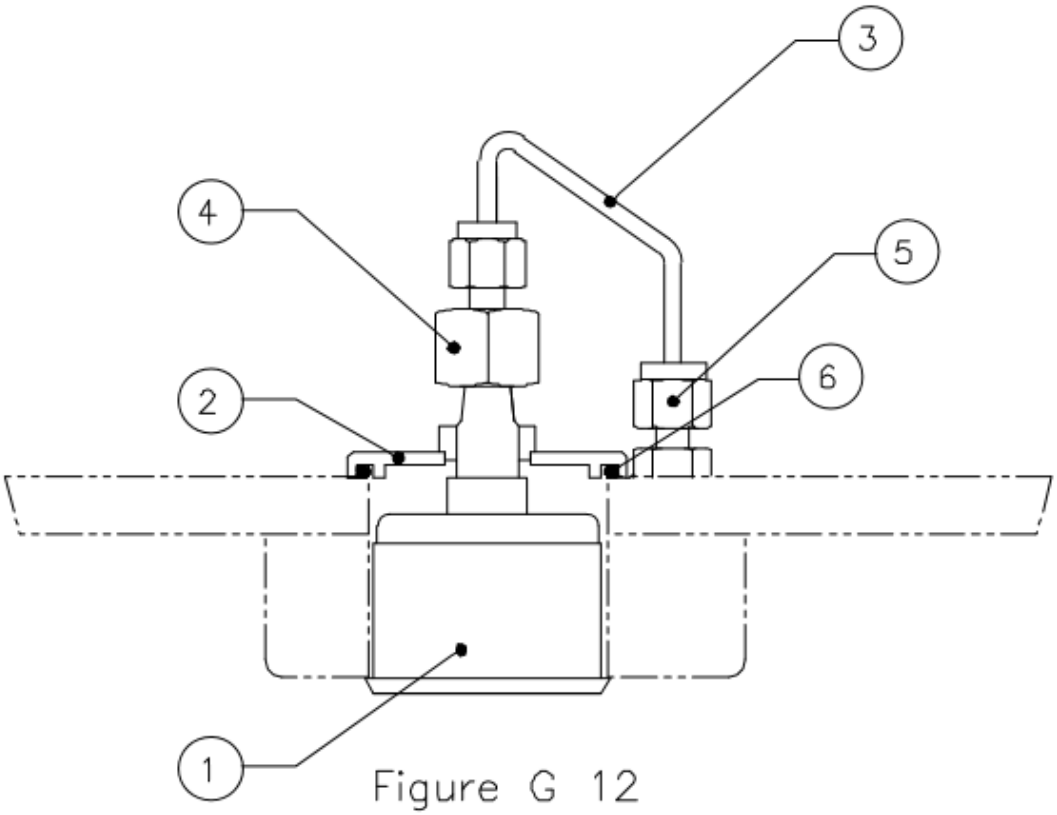

Figure G 12
Fuel Pressure Gauge

No.	Description
1	Piezo Ignitor – Ceramic Electrode
2	Piezo Ignitor – Insulator
3	Piezo Ignitor – Spring
4	Piezo Ignitor – Ignitor Unit
5	Piezo Ignitor – Support Tube

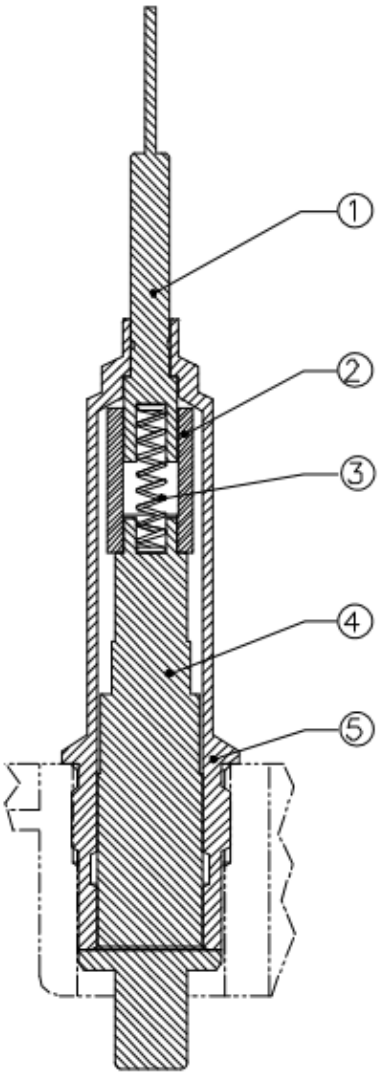

Figure G 13
Piezo Igniter

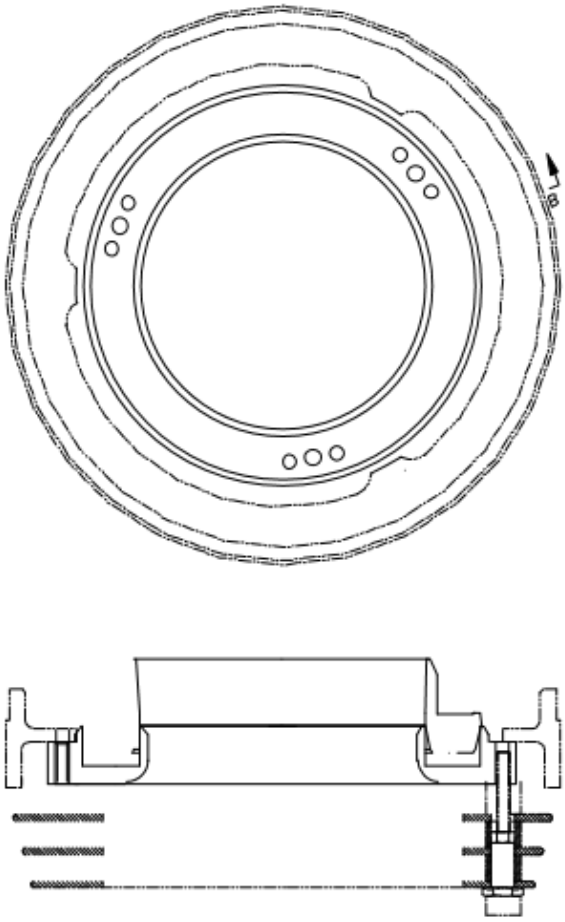

Stratus burner (''Appendix S'')

1. STRATUS BURNER: GENERAL

Prior to any disassembly work being done on the burner, ensure that the burner has been vented and all fuel pressure has been removed.

If any components require replacement use only approved Cameron Balloons US spare parts.

Following any maintenance and prior to further use, the burner must be pressure tested. Any items worked on must be subjected to an under pressure function test.

Any maintenance must be entered into the appropriate log book.

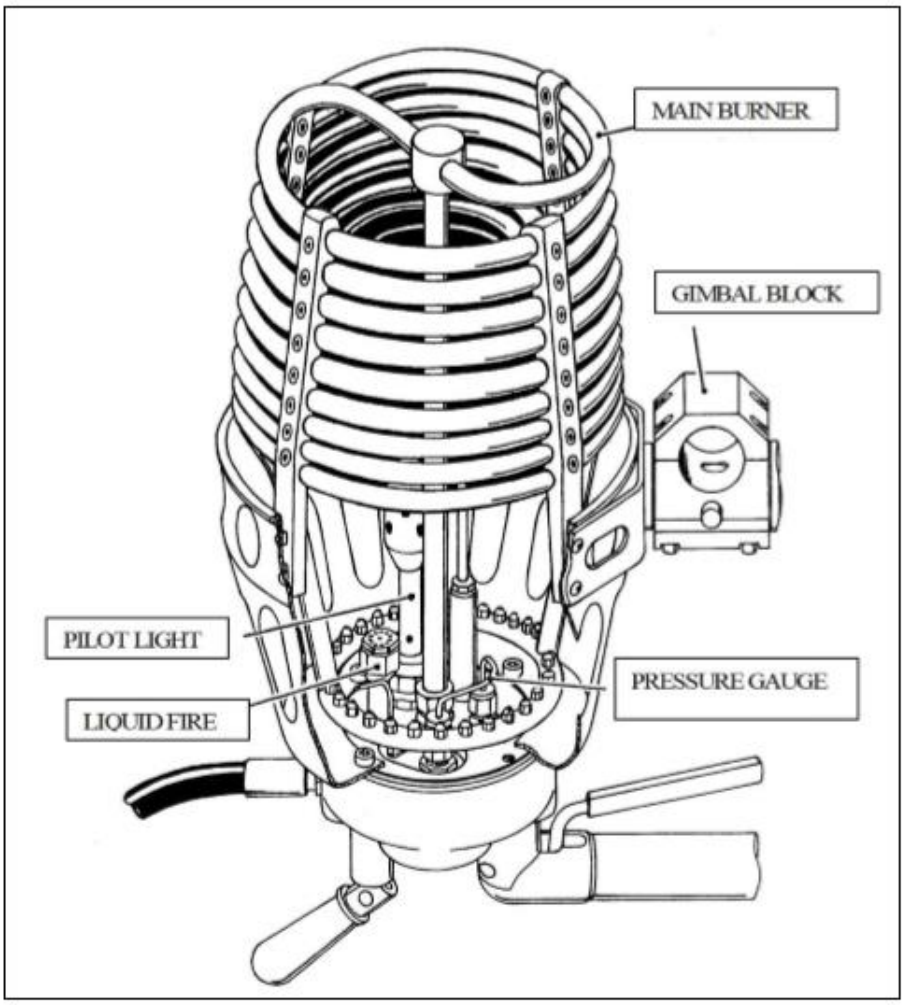

Figure 1: GENERAL ASSEMBLY

2. MAIN BLAST VALVE: Figure 2

To gain access to the main blast valve the burner handle must be removed.

1) Use an allen wrench (4mm) to remove the four handle retaining bolts (53025).

2) Remove the handle (F8529), the blast valve trigger assembly (F8566) and handle boss (F8528 or F8579).

3) Use a 33mm wrench to unscrew and remove the valve bonnet assembly (F8523 or F8581).

4) Remove the valve stem assembly.

5) Clean and inspect all parts.

6) Replace o-ring (F128R) and Teflon backup ring (F128T).

CAUTION: On re-assembly the stem o-ring and Teflon ring should be smeared with silicone grease.

7) Re-assembly in the reverse order.

CAUTION: Take care to install the superseal in the correct orientation and the stem o-ring and stem Teflon ring in the right order.

NOTE: There are no torque specs for the bonnet assembly. Tighten until snug.

NOTE: The internal parts of the Main Blast Valve are the same as those in the Liquid Fire Valve

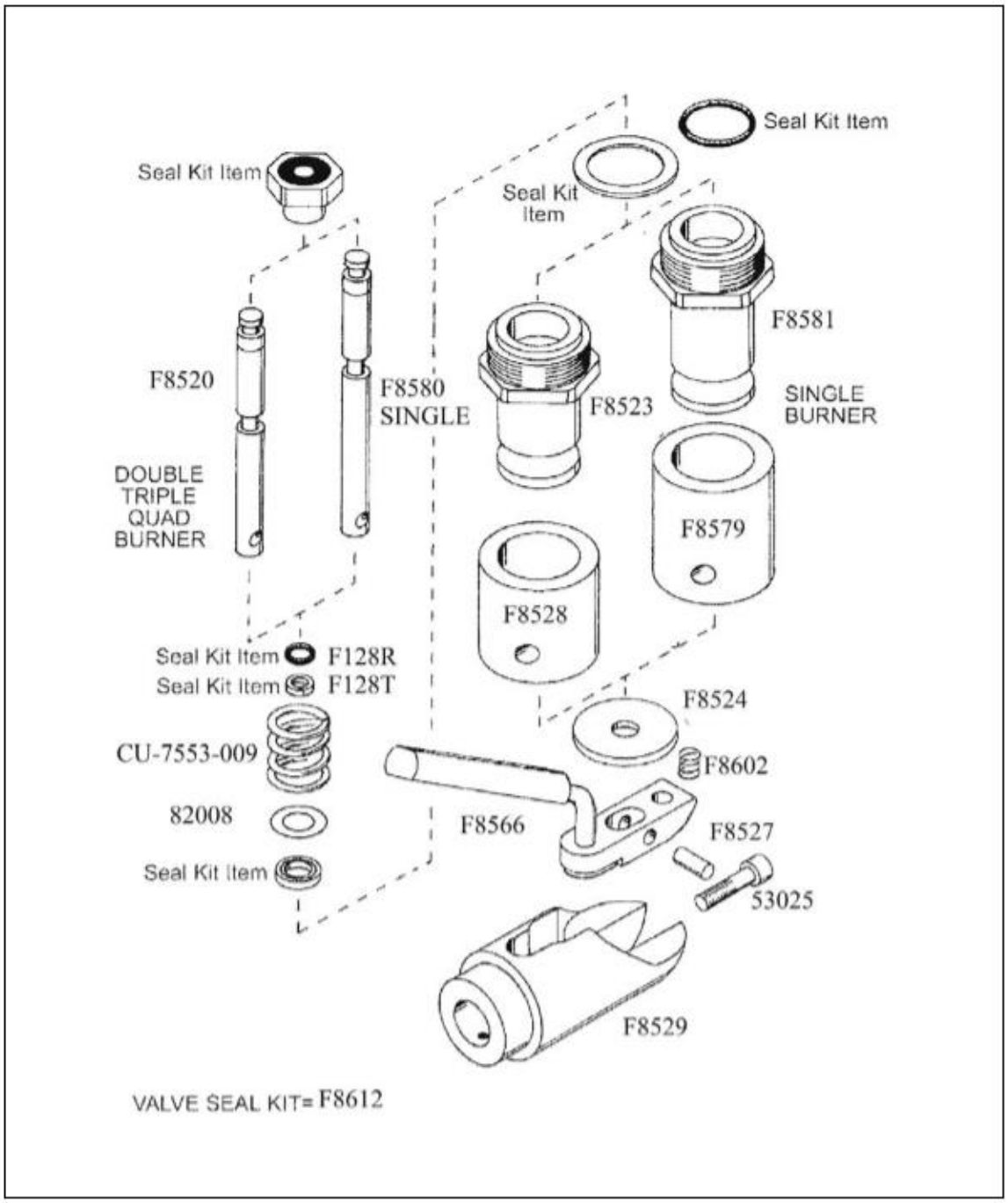

Figure 2: MAIN BLAST VALVE

3. LIQUID FIRE VALVE: Figure 3

1) Remove the circlip (F8300) and pivot pin (F8227) from the toggle handle.

2) Use a wrench (33mm) to unscrew and remove the valve bonnet assembly (F8521).

3) Remove the valve stem assembly.

4) Clean and inspect all parts.

5) Replace o-ring (F128R) and Teflon backup ring (F128T).

CAUTION: On re-assembly the stem o-ring and Teflon ring should be smeared with silicone grease.

6) Re-assembly in the reverse order.

CAUTION: Take care to install the superseal in the correct orientation and the stem o-ring and stem Teflon ring in the right order.

NOTE: There are no torque specs for the bonnet assembly. Tighten until snug.

NOTE: The internal parts of the Main Blast Valve are the same as those in the Liquid Fire Valve

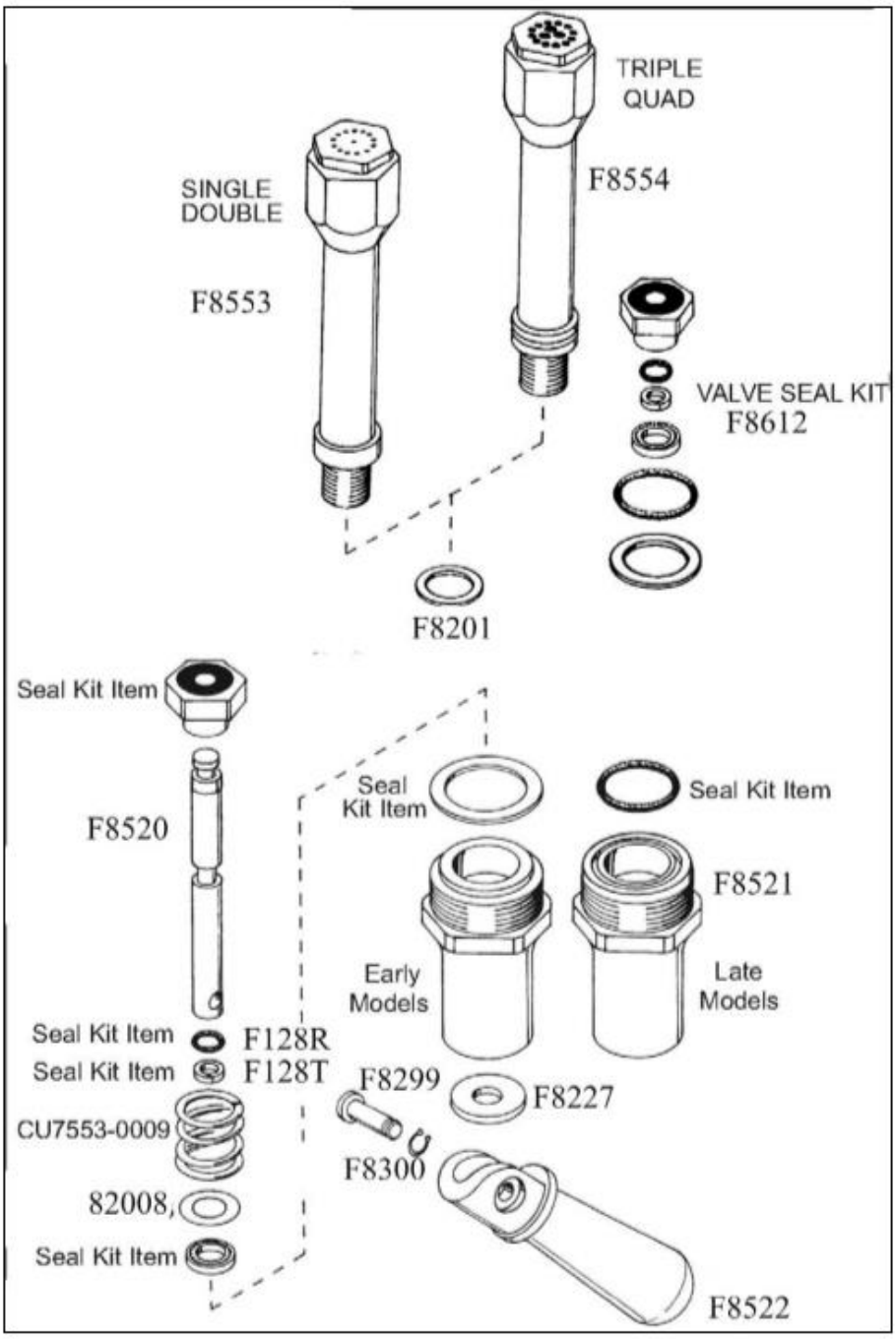

Figure 3: LIQUID FIRE VALVE

4. UPPER PILOT LIGHT: Figure 4

1) Remove the regulator and flame cup with Cameron special tool (F115X) or a 30mm crowfoot wrench. This will either separate the regulator upper body (F8556) from its lower half (F8545) or extract the complete regulator assembly from the valve block.

NOTE: Take care not to damage the igniter electrode when performing this procedure.

2) Unscrew the regulator upper body from its lower half (if necessary) and remove the spring (F8539) and piston assembly (F8624).

NOTE: DO NOT clamp the regulator upper body in a vice or other tool as this can distort the part, which could cause incorrect operation.

3) Unscrew the flame tube (F8517) from the regulator upper body (F8566) to reveal the pilot light jet (F8013).

4) Unscrew the jet (F8013) to reveal the filter (F8546).

NOTE: If either of these items appears to be blocked or contaminated they should be replaced or thoroughly cleaned using a hydrocarbon solvent before being refitted.

5) Inspect the inside of the regulator upper body (F8556) and piston assembly for contamination. Clean with solvent and lent free cloth.

6) Check that the rubber seal on the end of the piston and piston o-rings are in good condition and secure. If any are damaged it must be replaced.

7) If necessary, lightly lubricate the piston sealing o-rings with silicone spray and install the piston into the upper body.

NOTE: Take care not to damage the white sealing ring on the screw thread inside the upper body.

8) Install the regulator spring and screw the upper and lower bodies together.

9) Install the pilot light flame tube onto the regulator ensuring the parts are tightly screwed together.

NOTE: The air regulator (F8565) should cover only one of the two intake holes.

10) Install the pilot light assembly into the valve block taking care that the lower body o-ring is in the correct position.

11) Adjust the igniter electrode to a gap of 4-6mm (5/32" to 1/4") and ensure the spark jumps to the edge of one of the flame cup holes.

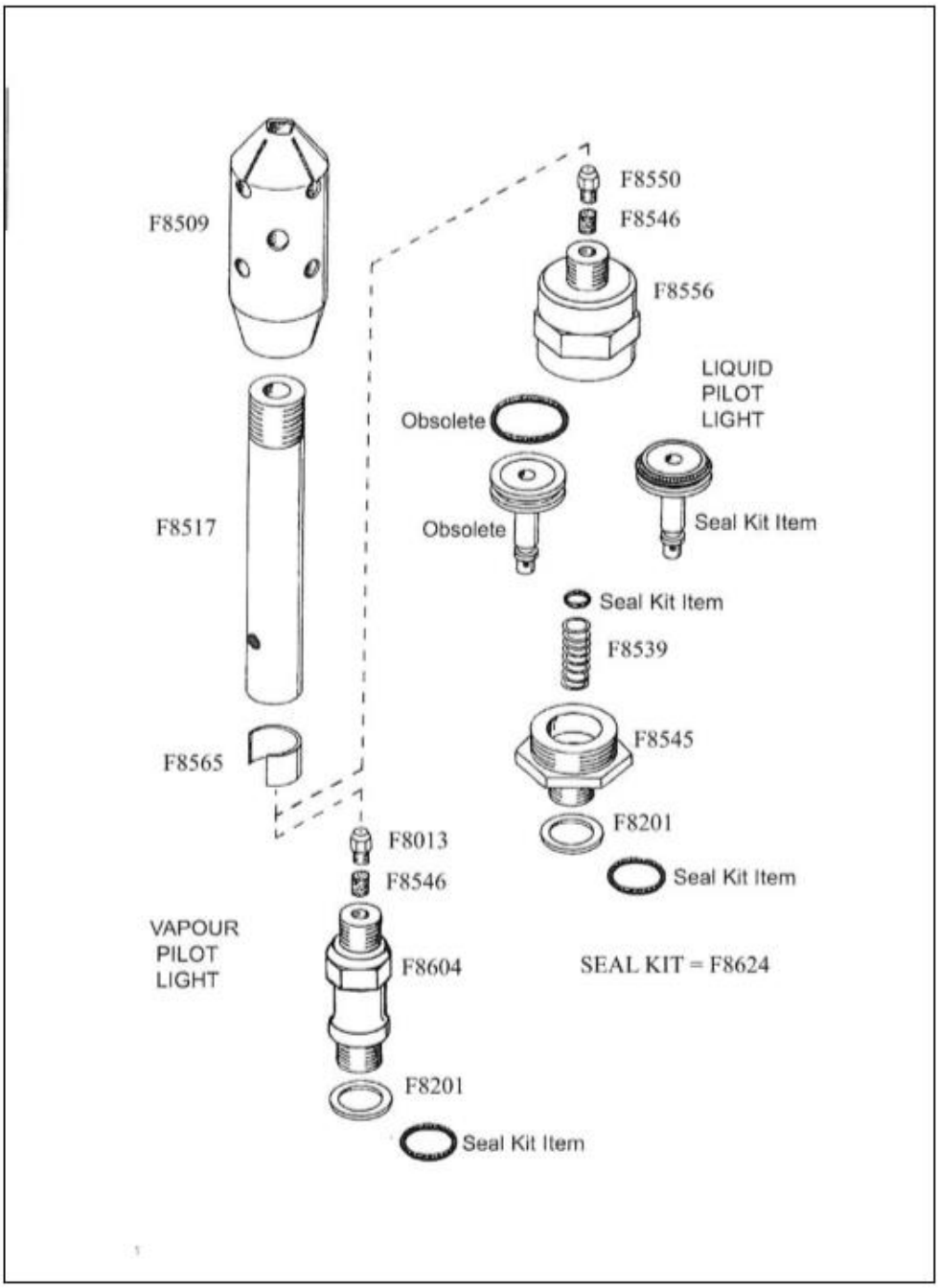

Figure 4: UPPER PILOT LIGHT

5. LOWER PILOT LIGHT: Figure 5

1) Remove the handle (F8514) by unscrewing the attaching bolt (33016).

2) Remove the handle dowel (F8515) from the valve block.

NOTE: The dowel has a small flat on its diameter where it is in contact with the handle.

3) Unscrew the pilot valve nut (F8512). Special tool F115Y is required.

NOTE: Firm pressure must be maintained to keep the tool engaged.

4) Remove the stem assembly.

5) Clean and inspect all parts.

6) Replace o-ring (F128R) and Teflon backup ring (F128T).

CAUTION: On re-assembly the stem o-ring and Teflon ring should be smeared with silicone grease.

7) Re-assembly in the reverse order.

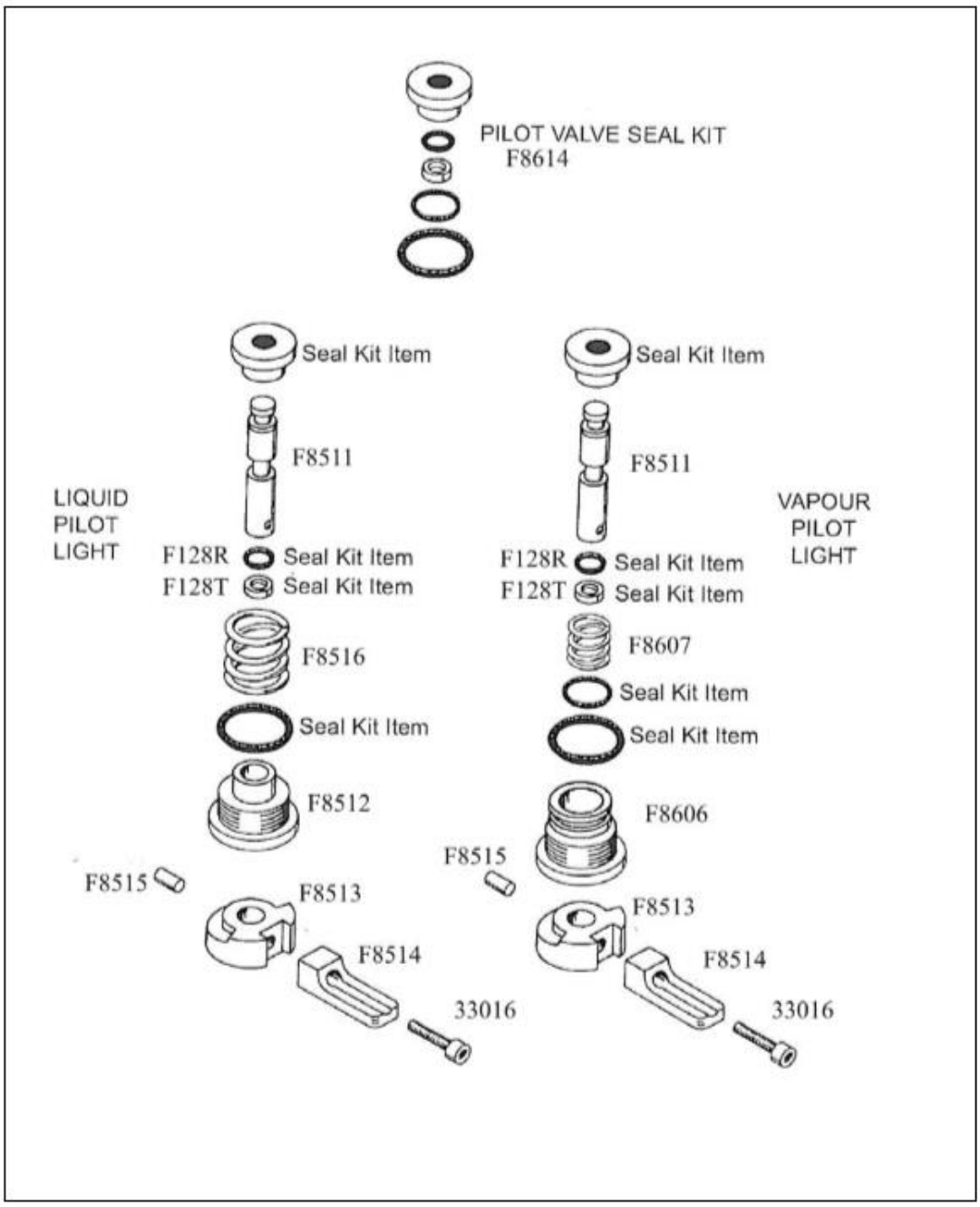

Figure 5: LOWER PILOT LIGHT

6. PIEZO IGNITER: Figure 6

1) Move the pilot light valve handle to the on position to reveal the piezo igniter housing.

2) Unscrew the piezo igniter assembly from the block. Special tool F115Y is required.

3) Mark the position of the electrode tip onto the outside of the housing (F8506) (important for reassemble).

CAUTION:	**The igniter electrode ceramic insulator is very brittle, using excessive force may cause it to shatter.**

4) Unscrew the lock nut on the electrode (F8561) and then unscrew the piezo push-button generator (F8505).

5) Replace any defective items and then careful re-insert the parts into the housing, ensuring that both ends of the lead (F8508) remain firmly plugged onto the terminals.

6) Tighten the push-button generator into the housing.

7) Adjust the electrode to be in line with the mark made in step 3 then tighten the electrode lock nut.

8) Inspect the o-ring, replace if necessary. Install the o-ring onto the housing.

9) Insert the Piezo Igniter into the block and tighten.

10) Insure the spark gap is 4-6mm (5/32" to 1/4") and the spark jumps to the edge of one of the flame cup holes.

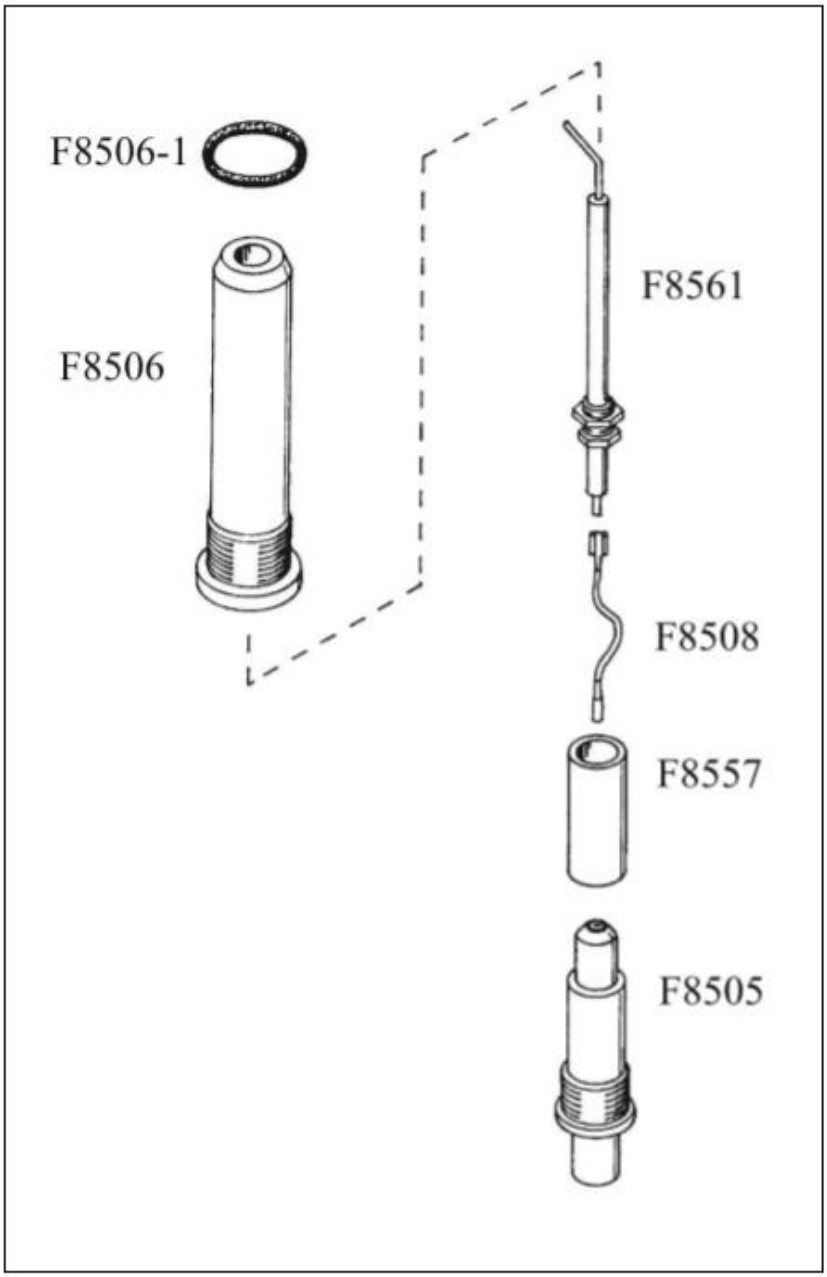

Figure 6: IGNITER

7. CROSSFLOW VALVE TRI & QUAD BURNERS ONLY: Figure 7

Minor leaks from the handle of the valve may be cured by tightening the stem.

1) Remove and discard the Unlock nut that retains the handle.

2) Apply Locktite 242 to the threads of the spindle.

3) Use a new Unlock nut and tighten the nut onto the spindle, checking the ease of rotation of the handle. The handle should move easily, but with noticeable friction.

CAUTION: Over tightening the nut will make the valve stiff to operate and will cause premature wear of the seals.

Other failures of the valve will require replacement of the valve.

REMOVING THE VALVE:

1) Loosen the compression fittings on either side of the valve.

2) Remove the banjo bolt from one end of the crossflow assembly.

3) Remove the valve from the crossflow pipe.

4) Replace the valve.

5) Re-assembly is the reverse of the above.

CAUTION: Do not over tighten the compression fittings. The fittings should be installed finger tight and then further tightened 1/4 turn.

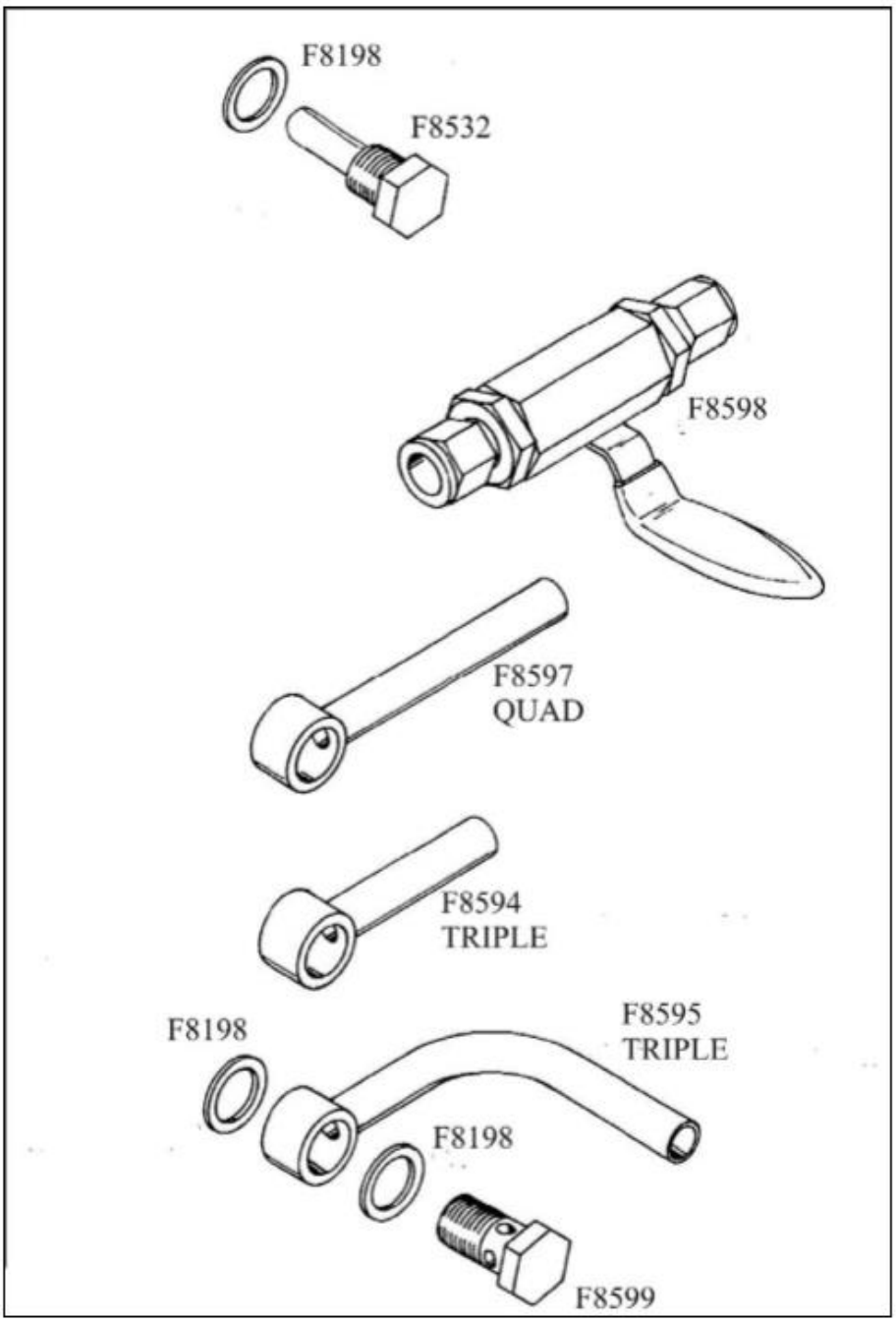

Figure 7: CROSSFLOW VALVE

8. PRESSURE GAUGE & FEED PIPE: Figure 8

Removal of the pressure gauge requires the valve block be separated from the can/coil assembly. See Section 2

1) Remove the handle assembly

2) Loosen the coil stem compression fitting nut.

3) Remove the four valve block retaining bolts in the base of the can.

4) Remove the valve block.

5) Remove the compression fitting nuts at each end of the pressure gauge feed pipe.

6) Remove the pipe.

7) Remove the pressure gauge retaining nut.

8) Remove the gauge.

9) Reassembly is reverse of above.

NOTE: Apply thread locking compound (Locktite 242 or equivalent) to pressure gauge retaining nut.

NOTE: Assure the correct orientation of the fuel pressure gauge.

NOTE: Apply a light coat of silicone grease to the valve block o-ring before installation.

CAUTION: The compression fittings should be hand tightened first then tightened an additional 1/4 turn.

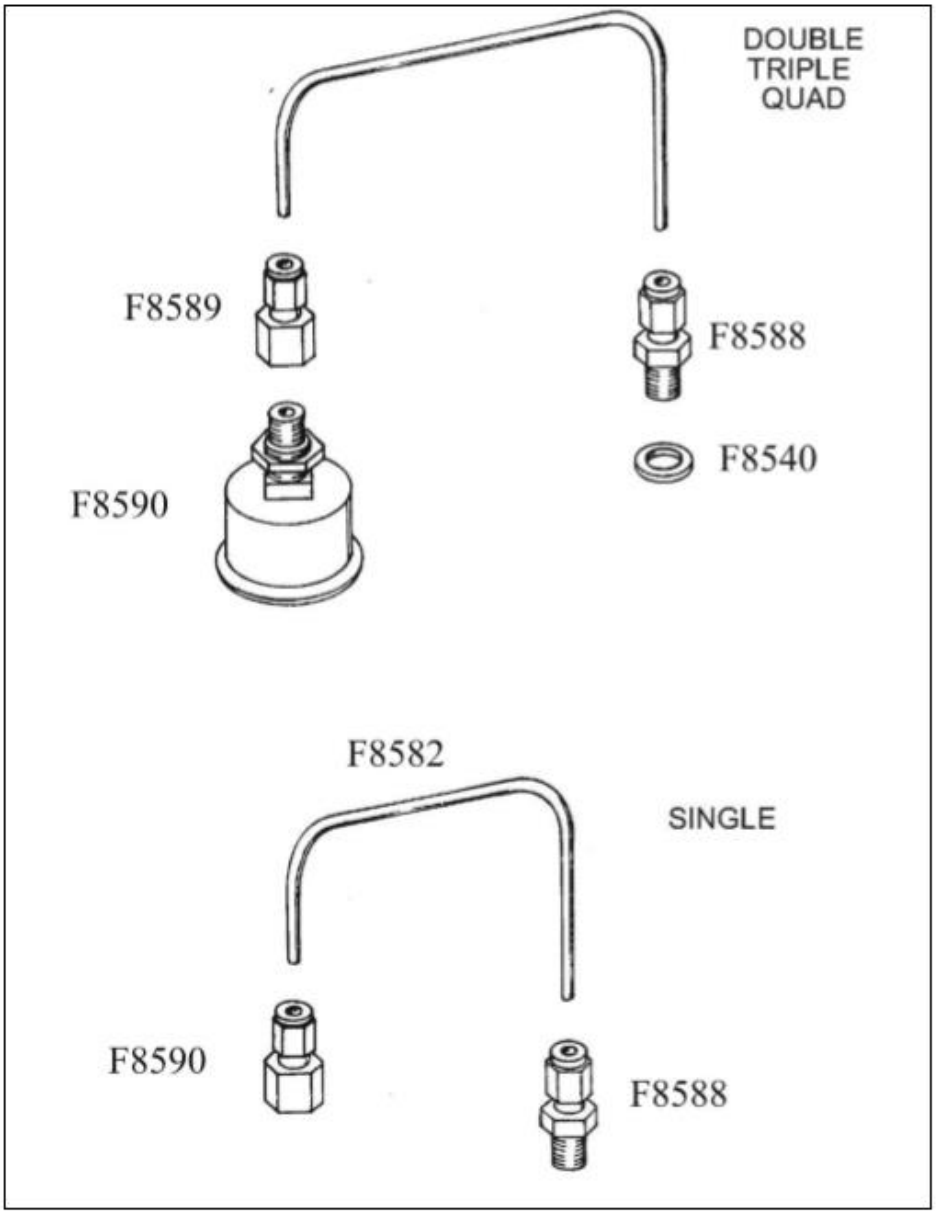

Figure 8: FUEL PRESSURE GAUGE

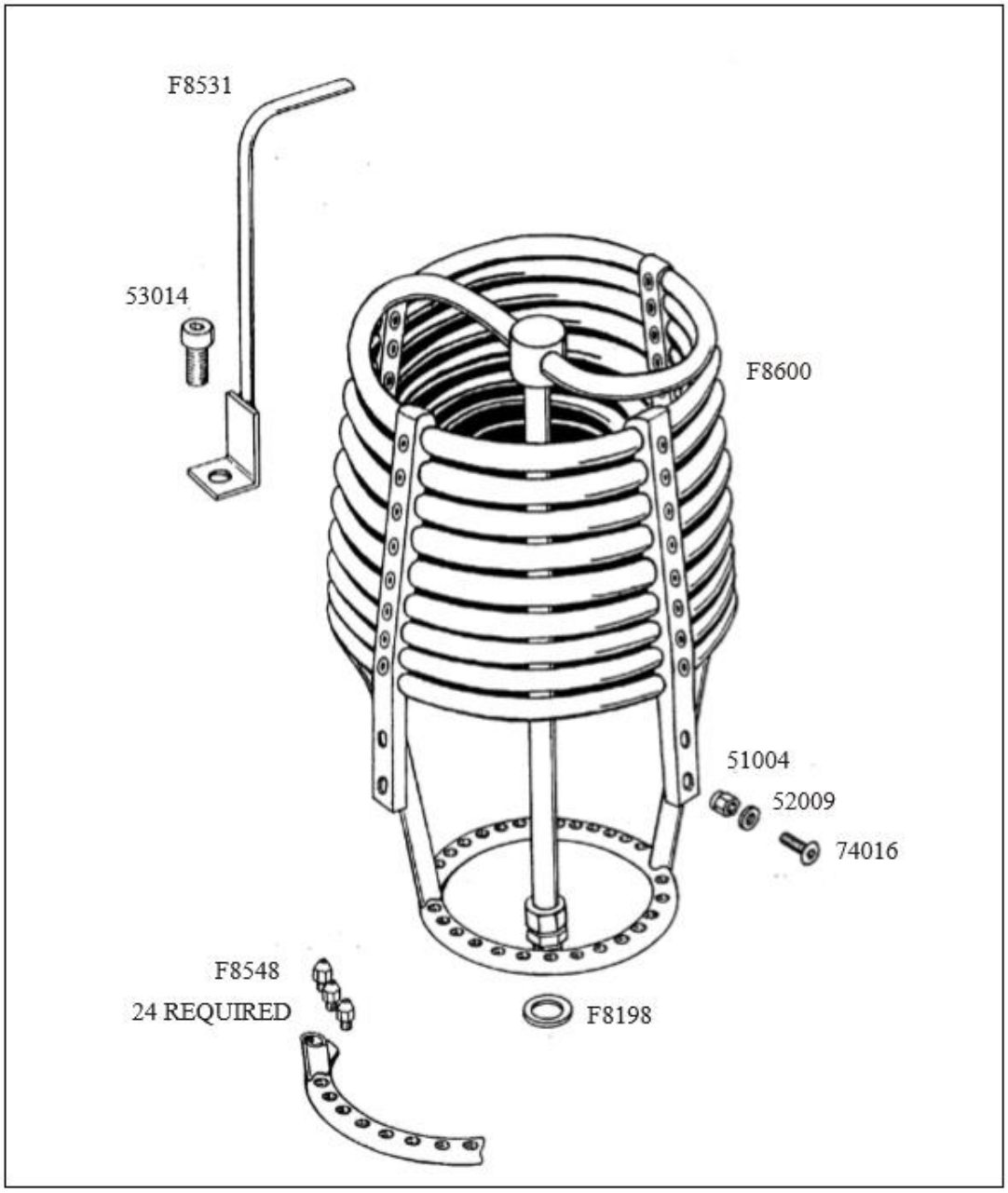

Figure 9: COIL ASSEMBLY

10. GIMBAL BLOCK: Figures 10 & 10a

Disassembly of the Gimbal block is straightforward.

1) Remove the 4 screws that retain the cap. Take care not to lose the friction pad and spring disc.

The following steps for reassembly **MUST** be used.

2) Refit the spring disc and friction pad into the Gimbal block.

3) Relocate the burner into the frame ensuring that it is orientated correctly.

4) Apply a small amount of grease onto the frame journal.

5) Apply thread locking compound (Locktite 242 or equivalent) to the 2 screws on the thick side of the cap. Screw down and FULLY TIGHTEN these screws.

6) Apply thread locking compound (Locktite 242 or equivalent) to the 2 screws on the thin side of the cap. Screw down and adjust tightness to give desired gimbal tension.

CAUTION:	**Over tightening the 2 screws on the thin side of the cap may result in a broken cap.**

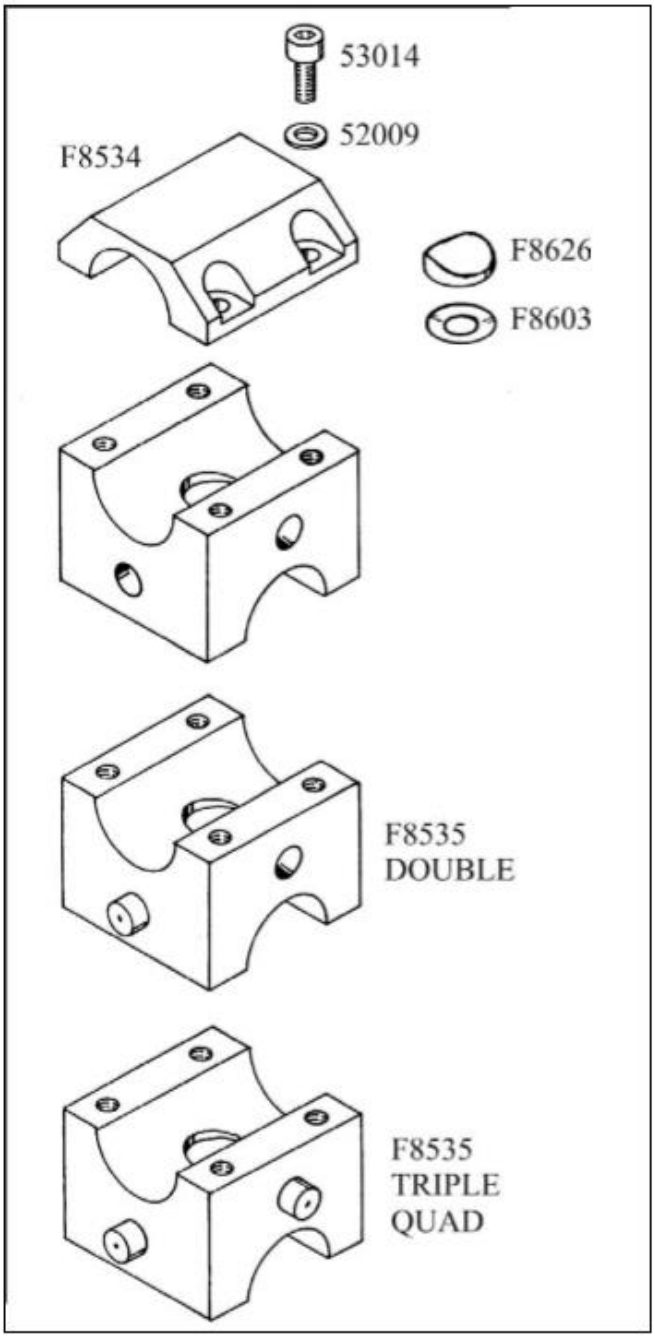

Figure 10: GIMBAL BLOCK

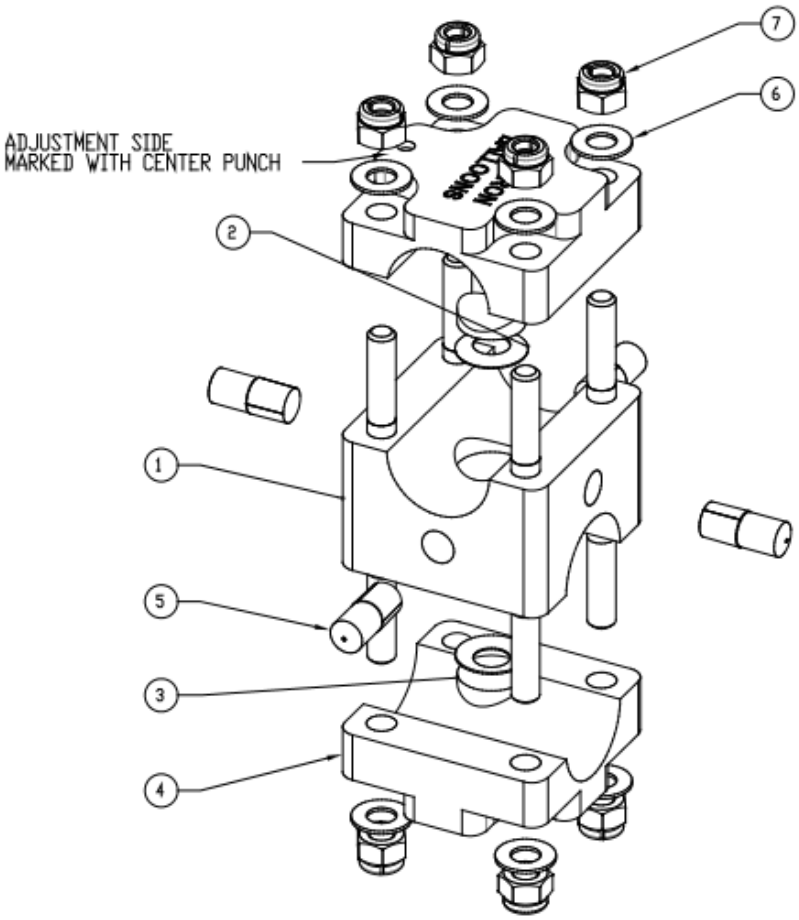

ITEM NO.	PART NUMBER	Description	CB2950-2000 (Double) /QTY.	CB2950-3000 (Triple and Quad) /QTY.
1	F2949	Gimbal Body Assembly, M8 Stud	1	1
2	F9603	Gimbal Spring Disc	2	2
3	F9626	Wear Pad, Gimbal Block	2	2
4	F2948	Gimbal Block Cap, M8 Stud	2	2
5	F9570	Dowel Pin, M10x26 ISO8734	2	4
6	82008	Washer, M8 Stainless Steel	8	8
7	86004	NUT, M8 Aerotight, Stainless Steel	8	8

Figure 10a: GIMBAL BLOCK, M8 Stud

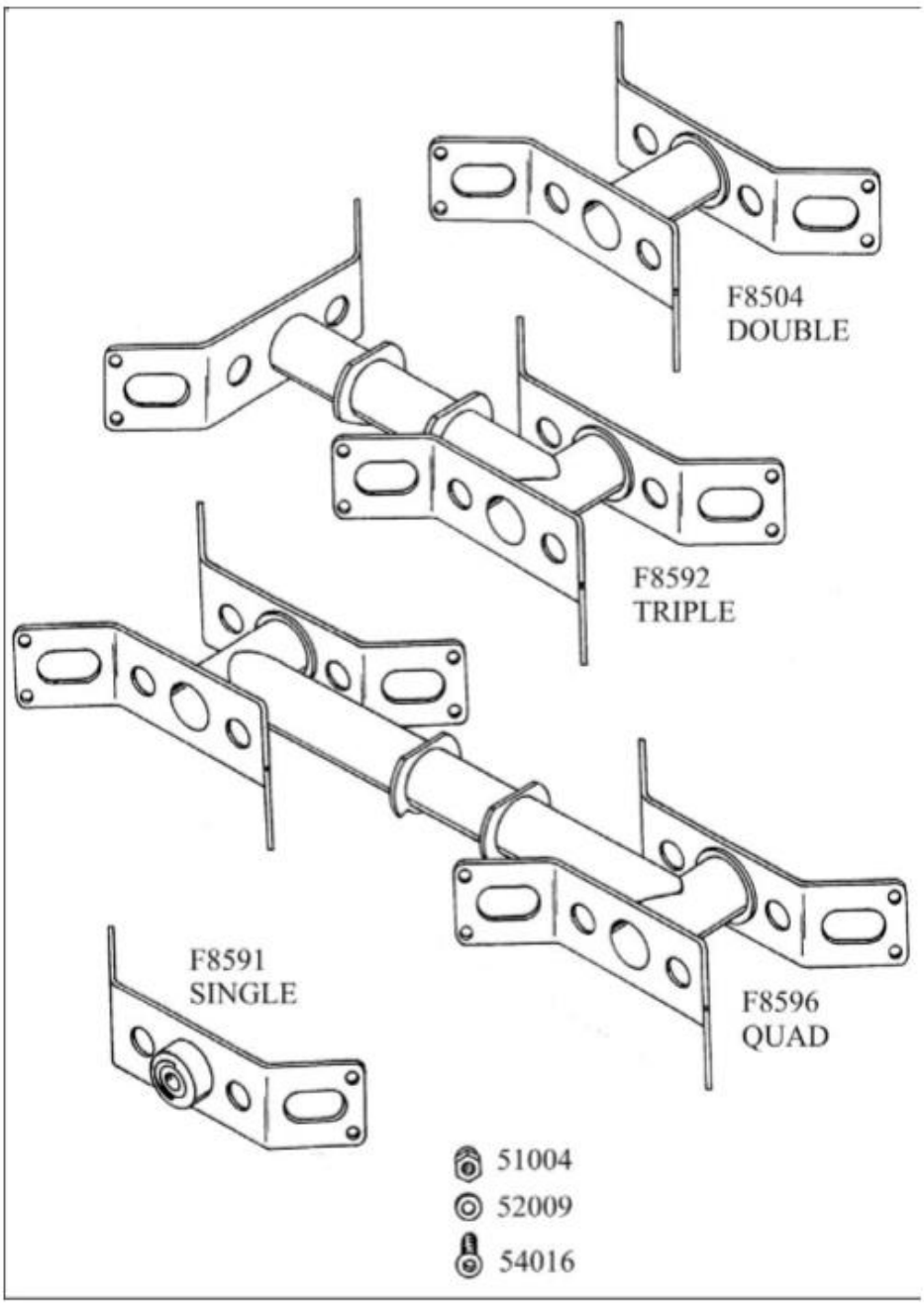

Figure 11: BRACKETS

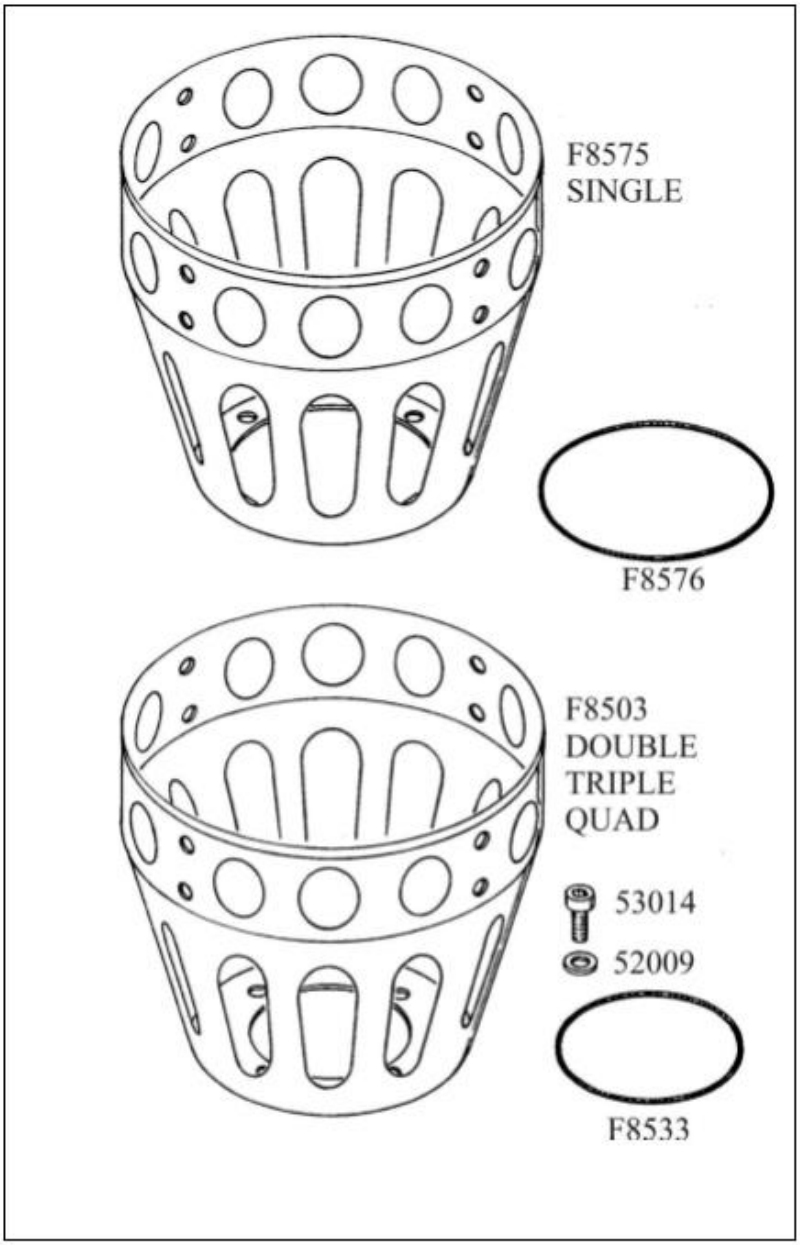

Figure 12: CAN

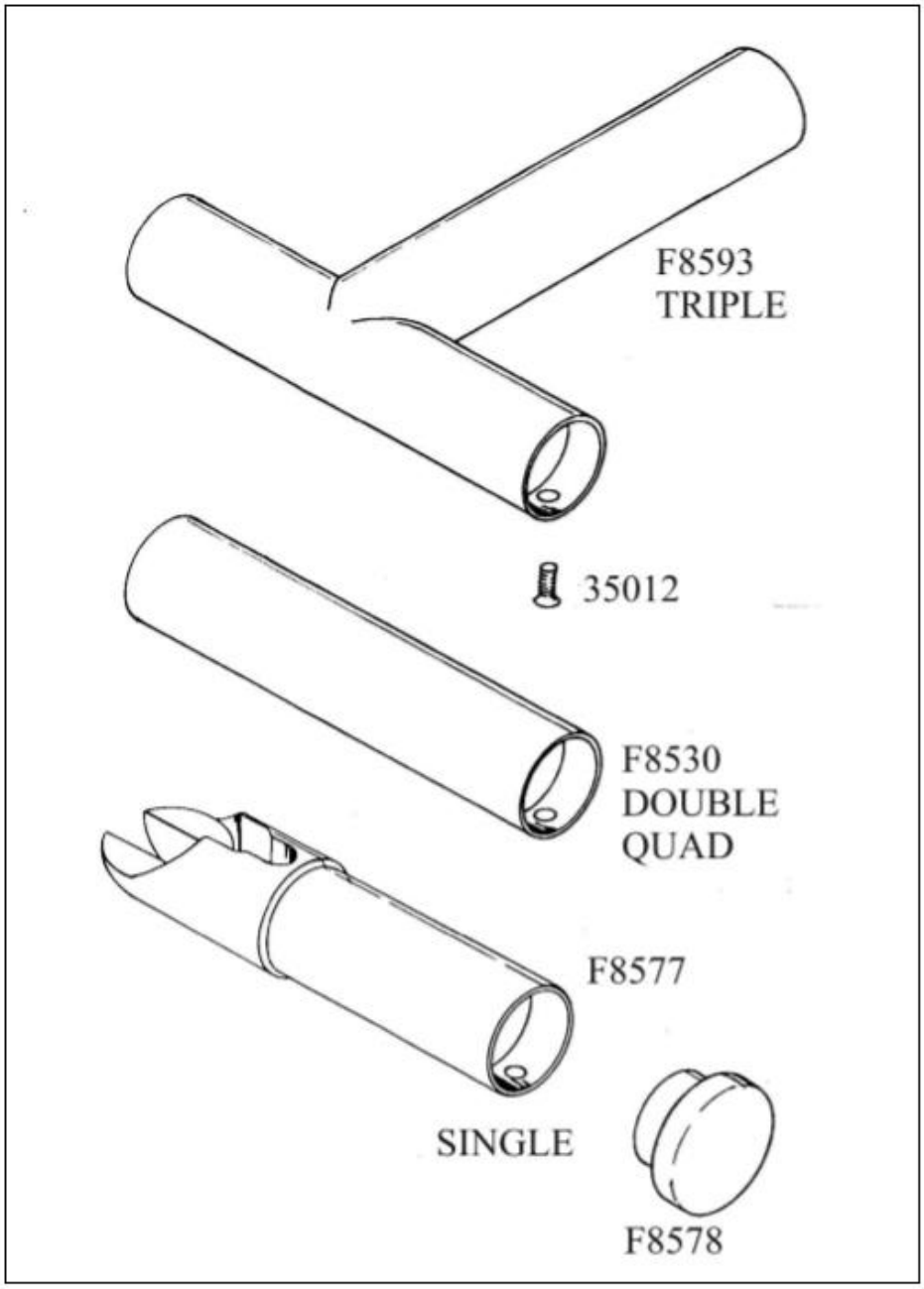

Figure 13: HANDLE

11. Required Maintenance at Annual/100 hr Inspection

1. Tighten the Main Burner Jets
2. Blast Valves MUST be Disassembled, Cleaned, Inspected & Lubricated
3. If Liquid Pilot Lights are used, Disassemble and Clean Regulator
4. Remove and Clean Pilot Light Jet & Filter
5. Liquid Fire Valves MUST be Disassembled, Cleaned, Inspected & Lubricated

Blast Valves & Liquid Fire O-rings & Teflon rings

MUST be Replaced

Burner gimbal friction force (''Appendix U'')

APPENDIX U
BURNER GIMBAL FRICTION FORCE

There are two types of burner gimbal systems. One is the 'Saddle Assembly System' and the other is the 'Gimbal Block System'. Currently the Saddle Assembly System is used on all MK IV Standard burners, all MK IV Super burners, all MK IV Ultra Single burners and early MK IV Ultra Double, Triple and Quad burners. The Gimbal Block System is used on current MK IV Ultra Double, Triple and Quad burners and on all Sirocco burners. The various types and styles of gimbal system can be visually identified using the following diagrams (Figures 1, 2 and 3).

The Saddle Assembly System utilizes an inner and outer frame, connected together with a bolt, saddles, friction washer, nuts and washers. There are two different saddle assemblies, the original – Style 'A' (Figure 1) and the newer – Style 'B' (Figure 2). Style 'B' has an 'Angle Limiting System' incorporated into it.

The Gimbal Block System utilizes a custom manufactured assembly consisting of a frame bridge, main block and two caps. There are two different Gimbal Block Assemblies, 'Type One' which uses allen head cap screws and lock washers to connect the caps to the main block and 'Type Two' which uses studs, locking nuts and washers to connect the caps to the main block (both Styles are shown in Figure 3). Both Gimbal Block styles have an 'Angle Limiting System' incorporated into it.

FRICTION FORCE ADJUSTMENT (MOVEMENT TENSION)

Burner gimbal movement tension is adjusted to pilot preference (and is considered Preventive Maintenance). There is no torque specification; however the recommended minimum friction force should be strong enough to stop the burner from moving when no intentional force is applied to it.

Saddle Assembly:

1) Fit a wrench to the bolt head and hold tightly.
2) Fit an open-end wrench (ground to the same thickness as the 'Thin Nut') to the 'Thin Nut'.
3) Tighten the 'Thin Nut' to the desired tightness /friction setting.
4) Remove the wrench from the bolt head and fit it to the 'Thick Nut'.
5) Tighten the 'Thick Nut' against the 'Thin Nut' assuring that the "Thin Nut' does not move.

Gimbal Block:

1) Screw down and SECURELY TIGHTEN the two cap screws (Style 1) or Locking Nuts (Style 2) on the "Thick Side" of the Cap.
2) Screw down and ADJUST TIGHTNESS to give desired movement tension to the two cap screws (Style 1) or Locking Nuts (Style 2) on the "Thin Side" (i.e. Friction-adjustment side) of the Cap (Style 2 Is marked with a hole in the cap, see Figure 3).

Figure 1 – Style A Saddle Assembly

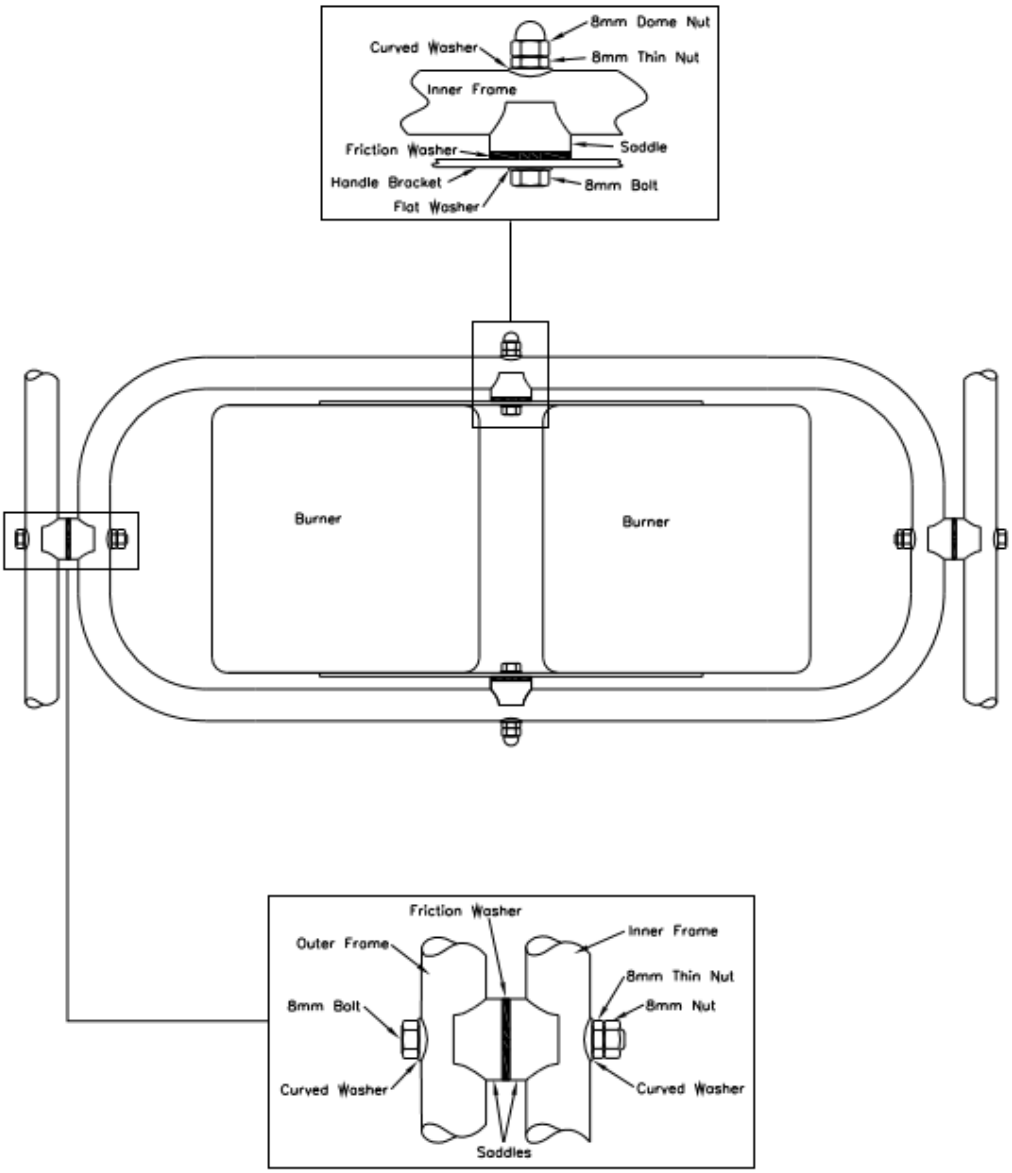

November 01, 2012

Page 2 of 4

Figure 2 – Style B Saddle Assembly

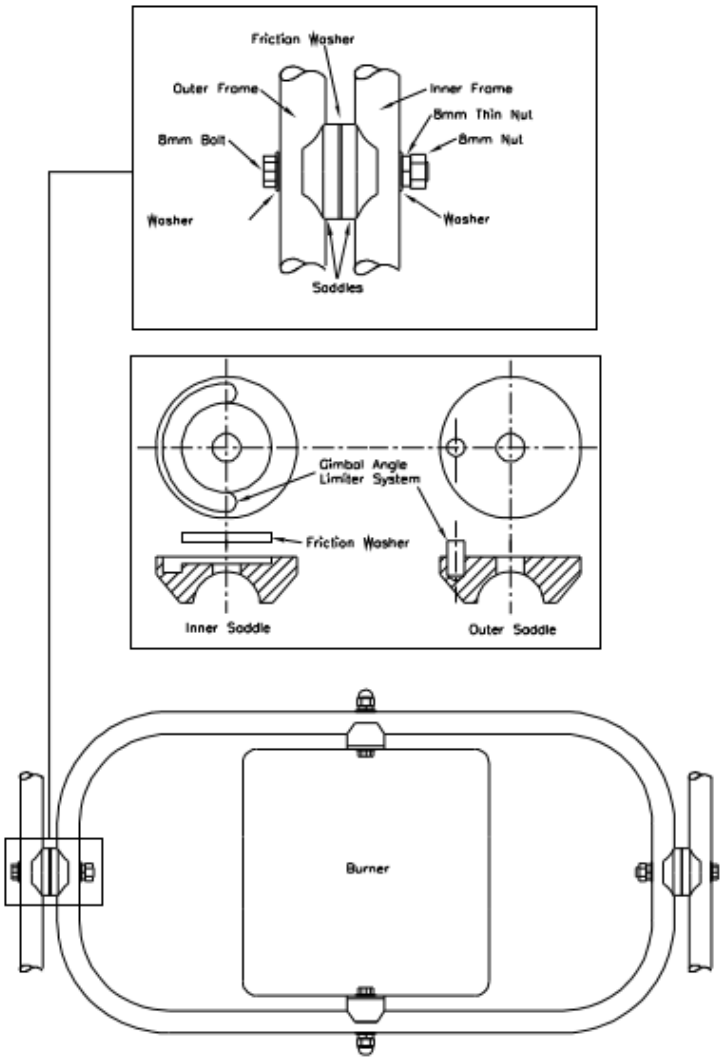

Figure 3 – Gimbal Blocks

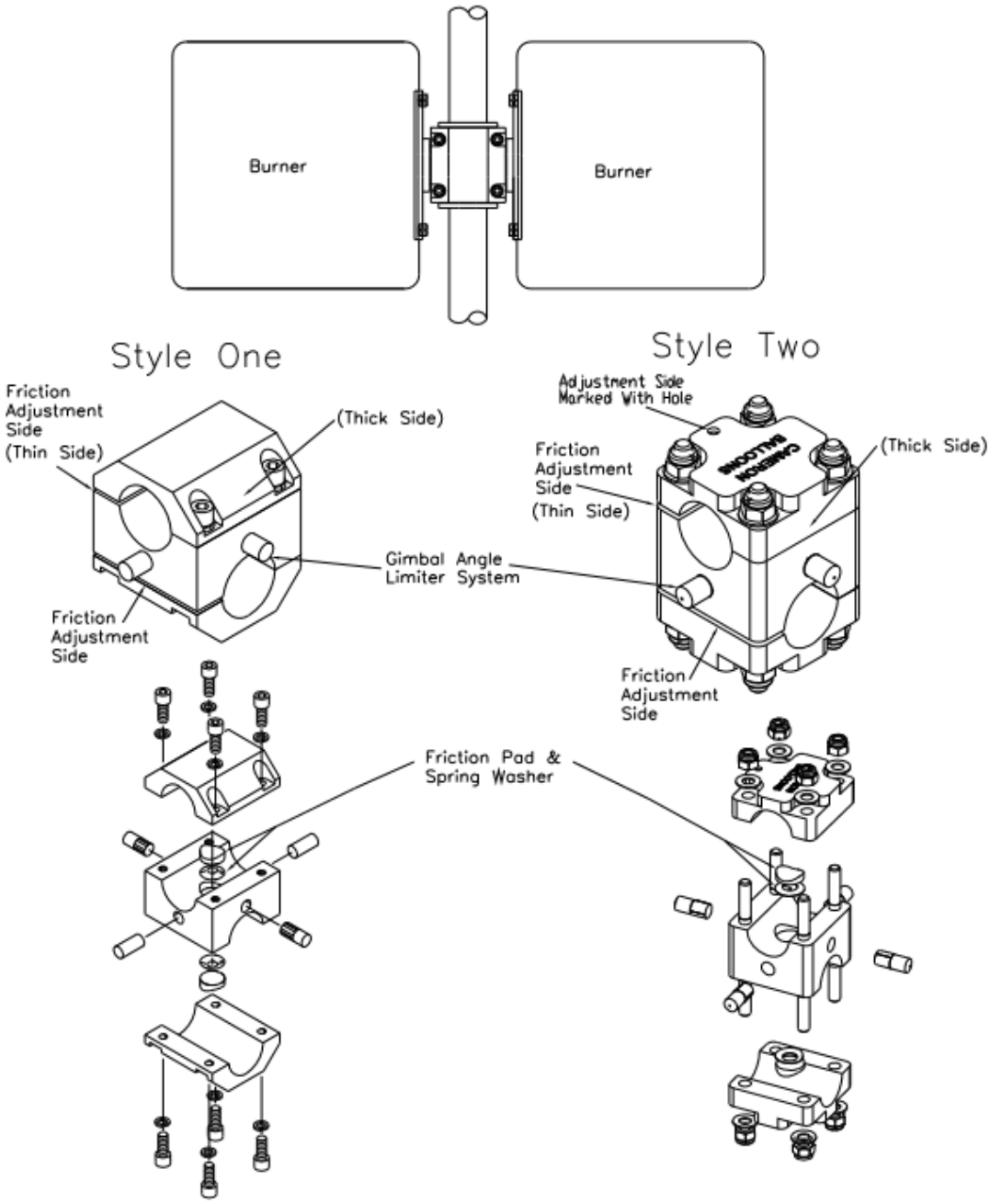

APPENDIX 7 – FUEL SYSTEM – additional information

Worcester Liquid Withdrawal Valve (''Appendix F'')

Worcester Liquid Withdrawal Valve

Worcester liquid withdrawal valves come in two configurations; either a 1 1/4" ACME (Rego) or a quick disconnect Tema fitting. See Fig. F-1.

The complete valve consists of :

1) an adapter that screws into the fuel tank,

2) a Worcester 1/4 turn ball valve,

3) an outlet block,

4) and either an ACME (Rego) style outlet or a Tema quick disconnect outlet.

A) EXTERNAL INSPECTION:

1) Insure that there are no leaks between the fuel tank to adapter, adapter to Worcester valve, Worcester valve to outlet block and outlet block to Rego or Tema outlet.

2) Insure that there are no leaks in the Rego or Tema outlet self seal.

3) Insure that the Rego outlet o-ring and square ring are not damaged.

4) Insure that the nut that holds the handle in place is tight.

5) Insure that the bolts that hold the entire unit together are tight.

6) Insure that the outlet dust cap is intact.

B) REPAIR:

1) There are no replacement parts available for the Rego or Tema outlets, except for the Rego outlet o-ring and square ring (washer). If the outlet self seal fails in either style, the entire outlet must be replaced.

2) There is a repair kit available for the Worcester valve. See Fig. F-2.

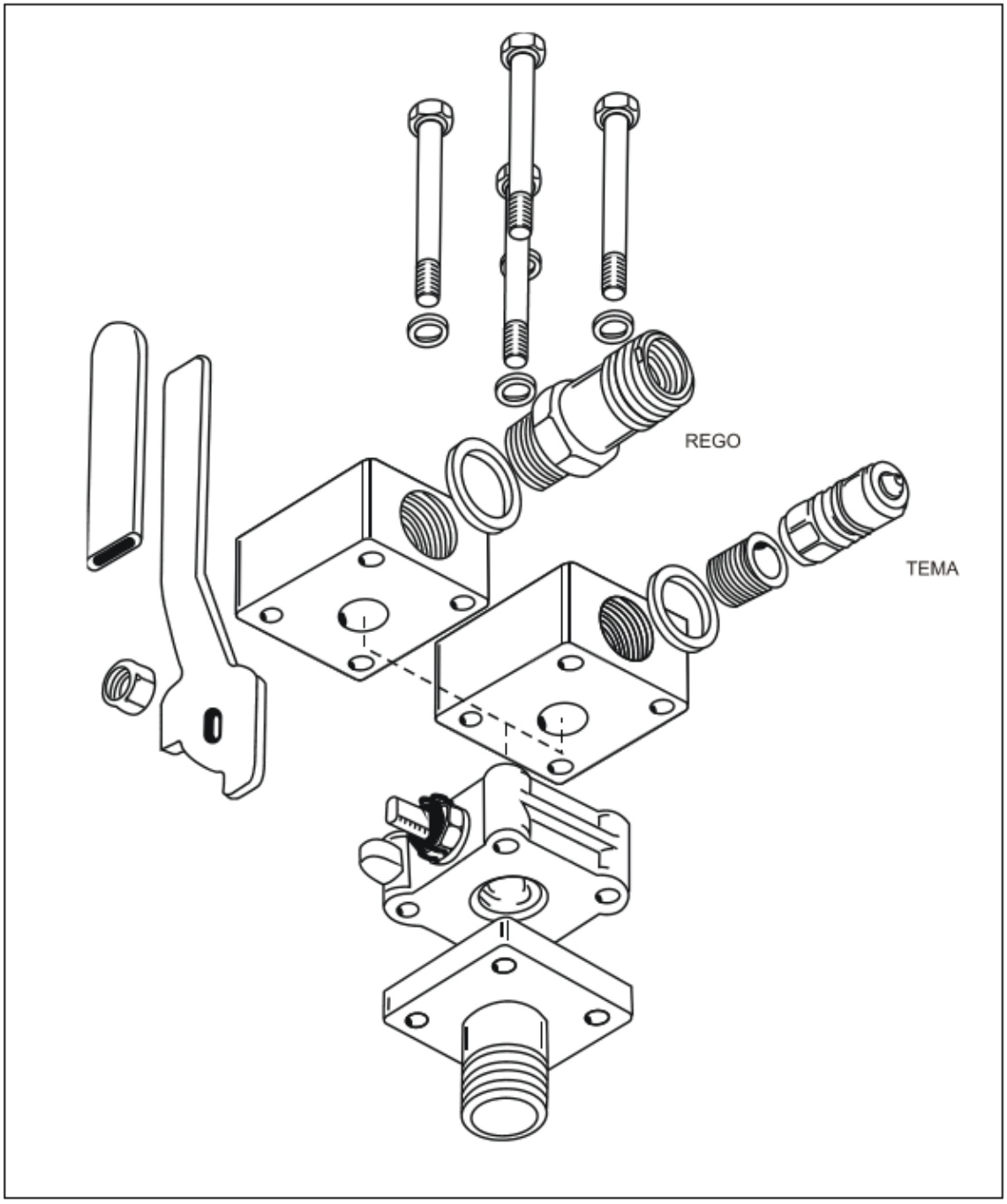

Fig. F-1
Worcester Liquid Withdrawal Valve,
Rego and Tema Style

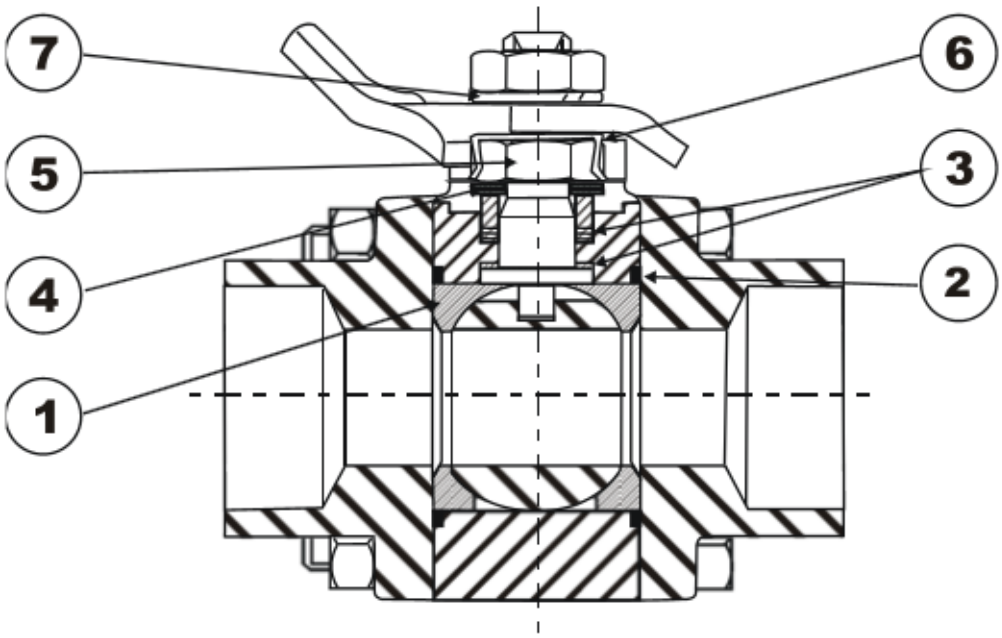

REPAIR KIT CONTENTS:

ITEM #	PART DESCRIPTION	QTY
1	SEAT RING	2
2	BODY SEAL	2
3	THRUST SEAL	4
4	DISC SPRING	2
5	GLAND NUT	1
6	LOCKING CLIP	1
7	SPRING WASHER	1

Fig. F-2
Worcester Valve Rebuild Kit

Re-qualification (re-certification) damage limits (''Appendix H'')

RE-QUALIFICATION (Re-Certification) DAMAGE LIMITS

A formal periodic re-qualification of D.O.T. approved fuel cylinders is required by the Department of Transportation. The D.O.T. requires a Re-qualification Identification Number (RIN) to inspect D.O.T. approved fuel cylinders. **All** Cameron fuel cylinders, even those without a D.O.T. approval must be re-qualified 12 years after the date of manufacture and every five years thereafter, if a complete **Visual Inspection** is used for Re-qualification .

DENTS

Dents are deformations caused by the cylinder coming into contact with a blunt object in such a way that the thickness of metal is not materially impaired.

Damage Limit: The dent may be no deeper than 10 % of the average diameter of the dent. When a dent includes a weld, the maximum depth is 0.25".

CUTS, GOUGES, DIGS AND CORROSION

Cuts, Gouges and **Digs** are deformations caused by contact with a sharp object in such a way as to cut into or upset the metal in the cylinder, decreasing the wall thickness. When measuring cuts, gouges or digs, the upset metal must be removed or compensated for.

Corrosion or **Pitting** involves the loss of wall thickness by corrosive media. There are two types of corrosion or pitting.

(1) **Isolated Pitting** of a small cross section does not effectively weaken the cylinder wall but may lead to complete penetration and leakage.

(2) **Line Corrosion** is when pits are not isolated but are connected or nearly connected to others in a narrow band or line.

DAMAGE LIMITS FOR CUTS, GOUGES, DIGS AND CORROSION

Part No.	Mat	All dims in inches Thickness		Line corrosion, cuts, gouges or digs less than 3" long, or general corrosion		Line corrosion cuts, gouges or digs greater than 3" long		Isolated Pits		Pits in General Corrosion Area	
		H	W	Shell	Head	Shell	Head	Shell	Head	Shell	Head
CB250	AL	.140	.140	.035	.035	.035	.035	.035	.035	.023	.023
CB497	SS	.047	.079	.005	.008	.005	.008	.005	.008	.005	.008
CB599	SS	.047	.079	.005	.008	.005	.008	.005	.008	.005	.008

Part No.	Mat	Thickness		Line corrosion, cuts, gouges or digs less than 3" long, or general corrosion		Line corrosion cuts, gouges or digs greater than 3" long		Isolated Pits		Pits in General Corrosion Area	
		H	W	Shell	Head	Shell	Head	Shell	Head	Shell	Head
CB2902	SS	.067	.079	.007	.008	.007	.008	.007	.008	.007	.008
CB426	SS	.047	.079	.005	.008	.005	.008	.005	.008	.005	.008
CBUS1050	SS	.086	.075	.009	.008	.009	.008	.009	.008	.009	.008
CB2901	SS	.067	.079	.007	.008	.007	.008	.007	.008	.007	.008
CB2380	Ti	.071	.079	.007	.008	.007	.008	.007	.008	.007	.008
CB959	SS	.047	.079	.005	.008	.005	.008	.005	.008	.005	.008
CBUS1060	SS	.086	.075	.009	.008	.009	.008	.009	.008	.009	.008
CB2903	SS	.067	.079	.007	.008	.007	.008	.007	.008	.007	.008
CB2383	Ti	.071	.079	.007	.008	.007	.008	.007	.008	.007	.008

LEAKS

Leaks may originate from defects in seams, thread openings or from dents, digs, gouges or pits.

To check for leaks, the cylinder must be charged and carefully examined. All seams and pressure openings must be coated with a detecting solution to detect escaping gas.

Maximum Limit: Any leakage, other than leakage at threaded openings that may be corrected by tightening or re-installation, is cause for rejection and removal from service.

BULGES

Maximum Limit: Cylinders which have definite visual bulges shall be rejected and removed from service.

FIRE DAMAGE

Maximum Limit: Cylinders which have been damaged by fire shall re rejected and removed from service.

GENERAL DISTORTION

Damage Limit: If any cylinder valve is noticeably tilted, the cylinder shall be rejected and removed from service.

FOOT RINGS AND HEAD RINGS

Foot rings and head rings should be examined to determine that they are in serviceable condition.

Damage Limit: Any damage to the **foot ring** that prevents the cylinder from free standing shall result in the cylinder being rejected and removed from service.

Any damage to the **head ring** which would prevent the protection of the cylinder valves shall result in the cylinder being rejected and removed from service.

INSPECTION REPORT FORM

The Department of Transportation Regulations require that results of the Re-qualification inspection be recorded and a permanent record be kept of all Visual Re-qualification Inspections. All required information is included on the supplied form. See Appendix H page 4

STAMPING VISUALLY RE-QUALIFIED CYLINDERS

A cylinder which passes a visual inspection must have the RIN and the new certification date stamped on the cylinder. The RIN is stamped above, below or before the date of inspection. The complete visual inspection is designated by stamping the letter "E" following the re-qualification date, i.e. '1107E'. This means the cylinder was Visually Re-qualified in November of 2007. The stamping must be placed adjacent to the previous date. It is recommended that the numbering die stamp used be from 3/16" to 1/4".

Disposition Codes
OK = Return to service
SC = Scrap
RM = Remove from Service

FUEL TANK RE--QUALIFICATION

Serial Number	Date Manufactured	DOT/ICC Spec. Number	Size	Name of Manufacturer	Disposition	Date Inspected	Inspector's Initials	Shop Order Number

Responsible Manager:_____

Electric heat tapes instructions for installation and use (''Appendix P'')

APPENDIX I
ELECTRIC HEAT TAPES
INSTRUCTIONS FOR INSTALLATION AND USE

WARNING

Incorrect use of electric heat tapes may result in an extreme hazard, property loss, injury or death. **BEFORE INSTALLATING OR USING HEAT TAPES, READ AND FOLLOW ALL THE INSTRUCTIONS BELOW.**

INSTALLATION

1. **CLEAN** the outside of the fuel tank to assure that the duct tape and plastic wrap will adhere well.
2. **TAPE** the plastic connector block, between the power lead and the heat tape, to the fuel tank with 2" duct tape. (See Figure 1)
3. **WRAP** the heat tape spirally onto the tank as shown in figure 2. Securely tape the end of the heat tape to the tank (See Figure 2). A consistent gap must be maintained between the heat tape coils.
4. **DUCT TAPE METHOD:** Securely tape the heat tape to the tank along the entire length of the orange, blue or black part of the heat tape. (See Figure 3). When the heat tape is properly installed, the orange, blue or black part of the tape will be totally covered by the duct tape.
5. **PLASTIC WRAP METHOD:** Complete steps 1 through 3. At three equally spaced positions around the tank circumference, secure the heat tape with vertical lengths of duct tape. (See Figure 4).
6. **PLASTIC WRAP METHOD:** Wrap the tank with at least 2 layers of plastic wrap that completely covers the heat tape. (See Figure 5).
7. **INSPECT** the installation to assure that:
   (a) The heat tape is not twisted.
   (b) The gap between the wraps of heat tape is maintained throughout its entire length.
   (c) The heat tape is securely held against the surface of the tank with either Duct Tape or Plastic Wrap.

WARNING!

Cameron foam-insulated tank covers **MUST BE INSTALLED** and at all times remain in place over the heat tapes. The covers protect the tapes from damage, which could cause a fire or electrical shock and which could result in **INJURY** or **DEATH**.

USE

WARNING

DO NOT connect the heat tapes to an electrical power source while the tanks are in a building, vehicle or other enclosed space. **OVER HEATING** may cause the release of flammable gas, explosion and/or fire, which could result in **INJURY or DEALTH**.

1. **ASSURE** that each tank to be heated is filled to, but **NOT** above, the tank fixed liquid level gauge (bleed valve) level. This fixed level (amount) of fuel:
   a) Allows the use of the table below to plan heating times.
   b) Results in consistent heating times for all tanks.
   c) Assures a vapor space in the tank to allow for liquid fuel expansion during heating without over-pressurizing the tank and causing potentially dangerous release of propane through the pressure relief valve.
2. Connect the heat tapes to an electric timer with an extension cord rated for the total load of the heat tapes you connect.

   Total power consumption equals the number of heat tapes in use multiplied by:
   a) 180 watts per tape for blue tapes or
   b) 168 watts per tape for orange tapes or
   c) 161 watts per tape for black tapes.
3. Carefully set the timer to apply power to the heat tapes for the length of time specified in the table below. The table shows the **MAXIMUM** length of time to heat the tank(s) based on the **GREATER** of the fuel temperature or air temperature.

WARNING

The electric power cord of the heat tape must **NOT** pass under the tank belt (between the tank belt and the tank). Miss-routing of the power cord may cause damage to the cord insulation, which could result in a hazard of fire or electric shock, which could result in injury or death.

MAXIMUM TIME TO RUN HEAT TAPES

Maximum of Fuel Temperature or Expected Air Temperature (°F)	Maximum Duration of Heating (Hrs.)
60	1/2
50	3/4
40	1
30	1 1/2
20	2
10	2 1/2
0	3
Less than 0	3

4. Connect the timer to a power outlet rated for the total load of the heat tapes you are connecting. Most electric circuits are designed for a maximum of at least 1800 watts total electrical load. If it is necessary to use an extension cord, the extension cord must be rated for the total electrical load of the tapes you are connecting.

   180 watts per tape for blue tapes or

   168 watts per tape for orange tapes or

   161 watts per tape for black tapes.

   Times the number of heat tapes connected to the extension cord.

5. At the time that the heat tapes should be shut off, personally disconnect the electric power. **DO NOT** relay on the timer to function correctly. The purpose of the timer is to assure that the tapes are shut off if you, for any reason, are unable to disconnect them yourself.

WARNING

Tanks **MUST** always be kept in a position which keeps the pressure relief valve (PRV) inlet in VAPOR. Assure that the tanks are upright (valves up) during heating and use.

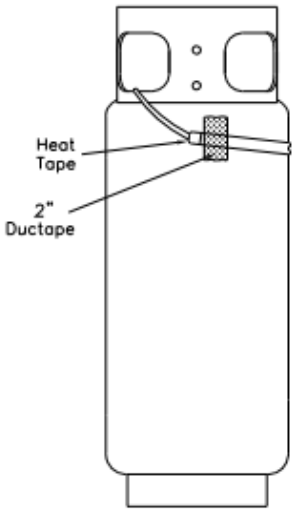

Figure 1

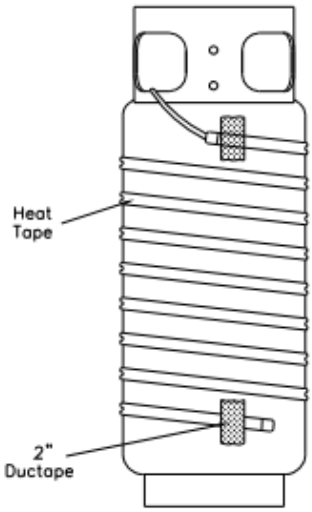

Figure 2

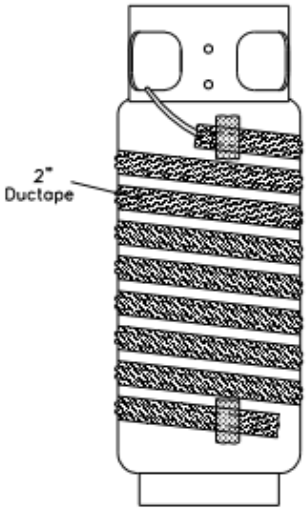

Figure 3
Duct Tape
Method

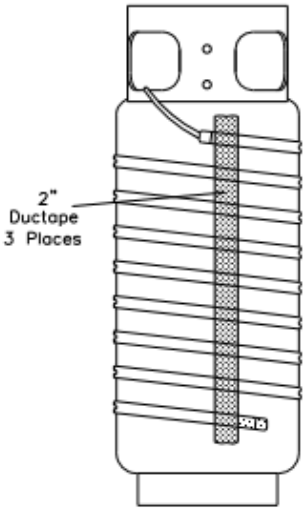

Figure 4
Plastic Wrap
Method

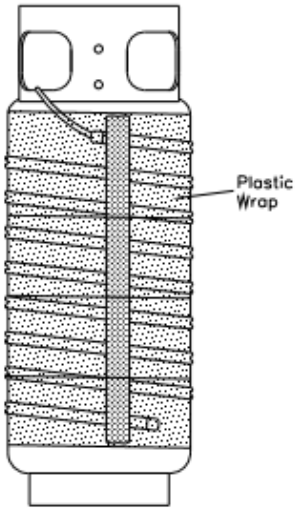

Figure 5
Plastic Wrap
Method

Approved fuel cylinder strap installation (''Appendix Q'')

WARNING! DANGER!

HAZARDOUS CONDITIONS WHICH COULD RESULT IN INJURY OR DEATH MAY OCCUR FROM:

A. THE INSTALLATION OF NON-APPROVED PARTS OR MATERIALS
B. MODIFICATION OF ANY PART
C. IMPROPER REPAIR PROCEDURES
D. IMPROPER OPERATION OF THIS AIRCRAFT
E. THE IMPROPER INSTALLATION OR ROUTING OF ANY TANK STRAP(S)

APPROVED FUEL CYLINDER STRAP INSTALLATION

1.0 GENERAL:

All fuel cylinder straps **MUST** be installed as illustrated in this Maintenance Manual Appendix.

ONLY fuel cylinder straps approved for use in Cameron Balloons US aircraft may be installed.

The Cameron Balloons US fuel cylinder strap installation procedure routes the straps so as to prevent lateral as well as vertical fuel cylinder movement. The straps **MUST** be routed as indicated below (see Figure 1).

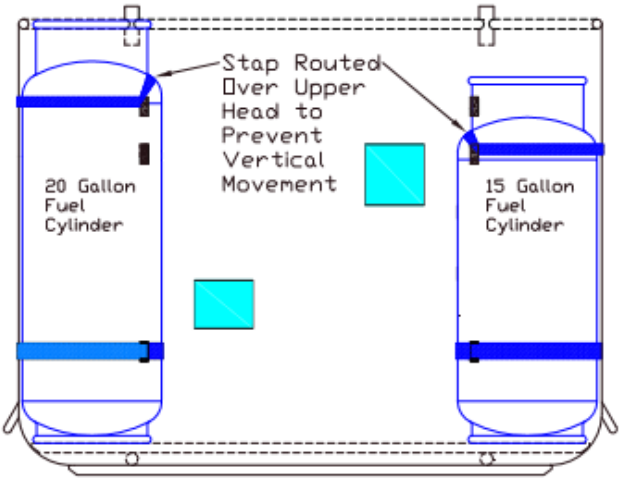

Figure 1
Straps Routed to Prevent Vertical Movement

Each fuel cylinder is secured with a minimum of two straps. Depending on the age and style of basket there are 3 widths of approved Cameron Balloons US fuel cylinder straps, 1 inch, 1.5 inch and 2 inch.

Aristocrat (serial numbers greater than 8800) and Regular Spec Top Frame Open baskets may use any Cameron Balloons US approved 10, 11 or 15 gallon fuel cylinder. High Spec Top Frame Open and T and TT-partition baskets may use any Cameron Balloons US approved 10, 11, 15 or 20 gallon fuel cylinder.

Aristocrat Baskets, Top Frame Open Baskets: The locations of the strap holes and strap routing are obvious.

Sport Baskets: The location of the pass through points are: on the long side; vertically, between the hi-light weave rows and horizontally, around the U-tube. On the short side; vertically, between the hi-light weave rows and horizontally, around the heavy vertical tank reinforcement up-right.

Early T & TT-partition Baskets: The locations of the strap holes and the 2" strap routing through these holes are obvious. However, some models with 20 gallon fuel tanks had an additional 1" strap routed through the basket weave at a point where the strap would pass over the upper part of the curved head of the fuel tank. (See Figure 2a)

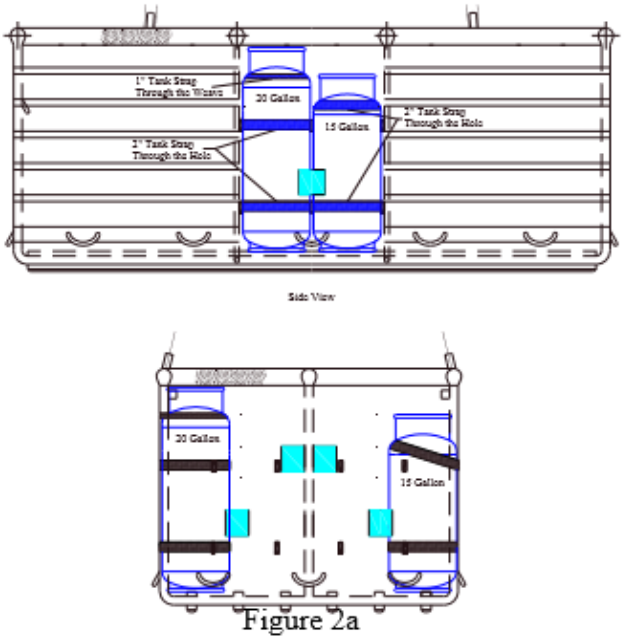

Figure 2a
Early T & TT-partition Baskets with 2" & 1" Tank Straps

Recent T & TT-partition Baskets: The location of the pass through points are indicated by the presence of heat shrink tubing installed on the heavy vertical tank reinforcement up-rights. (See Figure 2b)

Figure 2b
Locations of Heat Shrink Tubing Installed Indicating Strap Pass Through Points
Recent T & TT partition Baskets, Side View TT partition Shown

2.0 ARISTOCRAT & TOP FRAME OPEN BASKETS:

Figure 3
Aristocrat & Top Frame Open Basket Fuel Tank Strap Routing

3.0 CURRENT T & TT-PARTITION BASKETS:

Figure 4
T & TT-Partition Basket Fuel Tank Strap Routing

4.0 SPORT BASKETS:

Figure 5
Sport Basket Fuel Tank Strap Routing, 10 Gallon Fuel Tank

Figure 6
Sport Basket Fuel Tank Strap Routing, 15 Gallon Fuel Tank

WARNING! DANGER!

HAZARDOUS CONDITIONS WHICH COULD RESULT IN INJURY OR DEATH MAY OCCUR FROM:

A. THE INSTALLATION OF NON-APPROVED PARTS OR MATERIALS
B. MODIFICATION OF ANY PART
C. IMPROPER REPAIR PROCEDURES
D. IMPROPER OPERATION OF THIS AIRCRAFT
E. THE IMPROPER INSTALLATION OR ROUTING OF ANY TANK STRAP(S)

Fuel manifolds (''Appendix X'')

Appendix X – FUEL MANIFOLDS

GENERAL DESCRIPTION

Eighteen basic configurations of fuel manifolds are offered from Cameron Balloons to accommodate the many non-partitioned basket models available. There are multiple fuel tank configurations currently available. **Note: Part Number Revision Letters have been omitted.**

1) Fuel manifold part number **F361** is to be used **ONLY** with Cameron baskets:

Model	Size	Part Number	Serial Numbers
Aristocrat	42x48	CB301 (-10)	8800 & greater
Aristocrat	42x52	CB301 (-3)	
Flat Top	42x52	301-3FSH	
Flat Top	42x52	301-3FWH	
Flat Top	42x52	301-3FSR	
Flat Top	42x52	301-3FWR	
Aristocrat	42x58	CB301 (-4)	
Flat Top	42x58	301-4FSH	
Flat Top	42x58	301-4FWH	
Flat Top	42x58	301-4FSR	
Flat Top	42x58	301-4FWR	
Sport	42x50	CB301-7	
Sport	42x58	CB301-8	

using any of the following fuel tank combinations: (See Figures 2, 4, 5 & 6 for orientation)

Left Side	Right Side
CB250 Master or Standard 10 gal. or CB599 Master or Standard 11 gal. or CB426 Master or Standard 15 gal. or CBUS1050 Master or Standard 15 gal. or CB2380 Master or Standard 15 gal. or CB2900 Master or Standard 11 gal. or CB2902 Master or Standard 14 gal. or CB2901 Master or Standard 15 gal.	CB599 Master or Standard 11 gal. or CB426 Master or Standard 15 gal. or CBUS1050 Master or Standard 15 gal. or CB2380 Master or Standard 15 gal. or CB2900 Master or Standard 11 gal.or CB2902 Master or Standard 14 gal. or CB2901 Master or Standard 15 gal.

2) Fuel manifold part number **F362** is to be used **ONLY** with Cameron baskets:

Model	**Size**	**Part Number**	**Serial Number**
Aristocrat	42x48	CB301 (-10)	All numbers for AL to AL
Aristocrat	42x52	CB301 (-3)	
Flat Top	42x52	301-3FSH	8800 & greater for SS/TI to AL
Flat Top	42x52	301-3FWH	
Flat Top	42x52	301-3FSR	
Flat Top	42x52	301-3FWR	
Aristocrat	42x58	CB301 (-4)	
Flat Top	42x58	301-4FSR	
Flat Top	42x58	301-4FWR	
Flat Top	42x58	301-4FSR	
Flat Top	42x58	301-4FWR	
Sport	42x50	CB301-7	
Sport	42x58	CB301-8	

using any of the following fuel tank combinations: (See Figures 1 & 3 for orientation)

Left Side	Right Side
CB250 Master or Standard 10 gal. CB599 Master or Standard 11 gal. or CB426 Master or Standard 15 gal. or CBUS1050 Master or Standard 15 gal. or CB2380 Master or Standard 15 gal. CB2900 Master or Standard 11 gal. or CB2902 Master or Standard 14 gal. or CB2901 Master or Standard 15 gal.	CB250 Standard 10 gal. ONLY

3) Fuel manifold part number **F389** is to be used **ONLY** with Cameron baskets:

Model	**Size**	**Part Number**	**Serial Numbers**
Flat Top	42x52	301-3FSH	8800 & greater
Flat Top	42x52	301-3FWH	
Flat Top	42x58	301-4FSH	
Flat Top	42x58	301-4FWH	

using any of the following fuel tank combinations: (See Figures 2, 4, 5 & 6 for orientation)

Left Side	Right Side
CBUS1060 Standard 20 gal. or CB959 Standard 20 gal. or CB2903 Standard 20 gal.	CBUS1060 Standard 20 gal. or CB959 Standard 20 gal. or CB2903 Standard 20 gal.

4) Fuel manifold part number **F390** is to be used **ONLY** with Cameron baskets:

Model	**Size**	**Part Number**	**Serial Numbers**
Flat Top	42x52	301-3FSH	8800 & greater
Flat Top	42x52	301-3FWH	
Flat Top	42x58	301-4FSH	
Flat Top	42x58	301-4FW	

using any of the following fuel tank combinations: (See Figures 2, 4, 5 & 6 for orientation)

Left Side	Right Side
CB250 Master or Standard 10 gal. CB599 Master or Standard 11 gal. Or CB426 Master or Standard 15 gal. Or CBUS1050 Master or Standard 15 gal. Or CB2380 Master or Standard 15 gal. CB2900 Master or Standard 11 gal. or CB2902 Master or Standard 14 gal. or CB2901 Master or Standard 15 gal.	CBUS1060 Standard 20 gal. or CB959 Standard 20 gal. or CB2903 Standard 20 gal.

5) Fuel manifold part number **F391** is to be used **ONLY** with Cameron baskets:

Model	**Size**	**Part Number**	**Serial Numbers**
Flat Top	42x52	301-3FSH	8800 & greater
Flat Top	42x52	301-3FWH	
Flat Top	42x58	301-4FSH	
Flat Top	42x58	301-4FWH	

using any of the following fuel tank combinations: (See Figures 2, 4, 5 & 6 for orientation)

Left Side	Right Side
CBUS1060 Standard 20 gal. or CB959 Standard 20 gal. or CB2903 Standard 20 gal.	CB599 Master or Standard 11 gal. or CB426 Master or Standard 15 gal. or CBUS1050 Master or Standard 15 gal. or CB2380 Master or Standard 15 gal. CB2900 Master or Standard 11 gal. or CB2902 Master or Standard 14 gal. or CB2901 Master or Standard 15 gal.

6) Fuel manifold part number **F363** is to be used **ONLY** with Cameron baskets:

Model	**Size**	**Part Number**	**Serial Number**
Aristocrat	46x62	CB301 (-6)	8800 & greater
Flat Top	46x62	301-6FSH	
Flat Top	46x62	301-6FWH	
Flat Top	46x62	301-6FSR	
Flat Top	46x62	301-6FWR	

using any of the following fuel tank combinations: (See Figures 2, 4, 5 & 6 for orientation)

Left Side	Right Side
CB250 Master or Standard 10 gal. or CB599 Master or Standard 11 gal. or CB426 Master or Standard 15 gal. or CBUS1050 Master or Standard 15 gal. or CB2380 Master or Standard 15 gal. or CB2900 Master or Standard 11 gal. or CB2902 Master or Standard 14 gal. CB2901 Master or Standard 15 gal.	CB599 Master or Standard 11 gal. or CB426 Master or Standard 15 gal. or CBUS1050 Master or Standard 15 gal. or CB2380 Master or Standard 15 gal. or CB2900 Master or Standard 11 gal.or CB2902 Master or Standard 14 gal. or CB2901 Master or Standard 15 gal.

7) Fuel manifold part number **F364** is to be used **ONLY** with Cameron baskets:

Model	Size	Part Number	Serial Number
Aristocrat	46x62	CB301 (-6)	All numbers for AL to AL
Flat Top	46x62	301-6FSH	
Flat Top	46x62	301-6FWH	8800 & greater for SS/TI to AL
Flat Top	46x62	301-6FSR	
Flat Top	46x62	301-6FWR	

using any of the following fuel tank combinations: (See Figures 1 & 3 for orientation)

Left Side	Right Side
CB250 Master or Standard 10 gal. or CB599 Master or Standard 11 gal. or CB426 Master or Standard 15 gal. or CBUS1050 Master or Standard 15 gal. or CB2380 Master or Standard 15 gal. CB2900 Master or Standard 11 gal. or CB2902 Master or Standard 14 gal. or CB2901 Master or Standard 15 gal.	CB250 Standard 10 gal. ONLY

8) Fuel manifold part number **F392** is to be used **ONLY** with Cameron baskets:

Model	Size	Part Number	Serial Numbers
Flat Top	46x62	301-6FSH 301-6FWH	8800 & greater

using any of the following fuel tank combinations: (See Figures 2, 4, 5 & 6 for orientation)

Left Side	Right Side
CBUS1060 Standard 20 gal. or CB959 Standard 20 gal. or CB2903 Standard 20 gal.	CBUS1060 Standard 20 gal. or CB959 Standard 20 gal. or CB2903 Standard 20 gal.

9) Fuel manifold part number **F393** is to be used **ONLY** with Cameron baskets:

Model	**Size**	**Part Number**	**Serial Numbers**
Aristocrat	46x62	301-6FSH 301-6FWH	8800 & greater

using any of the following fuel tank combinations: (See Figures 2, 4, 5 & 6 for orientation)

Left Side	Right Side
CB599 Master or Standard 11 gal. Or CB426 Master or Standard 15 gal. Or CBUS1050 Master or Standard 15 gal. Or CB2380 Master or Standard 15 gal. CB2900 Master or Standard 11 gal. or CB2902 Master or Standard 14 gal. or CB2901 Master or Standard 15 gal.	CBUS1060 Standard 20 gal. or CB959 Standard 20 gal. or CB2903 Standard 20 gal.

10) Fuel manifold part number **F394** is to be used **ONLY** with Cameron baskets:

Model	**Size**	**Part Number**	**Serial Numbers**
Aristocrat	46x62	301-6FSH 301-6FWH	8800 & greater

using any of the following fuel tank combinations: (See Figures 2, 4, 5 & 6 for orientation)

Left Side	Right Side
CBUS1060 Standard 20 gal. or CB959 Standard 20 gal. or CB2903 Standard 20 gal.	CB599 Master or Standard 11 gal. or CB426 Master or Standard 15 gal. or CBUS1050 Master or Standard 15 gal. or CB2380 Master or Standard 15 gal. CB2900 Master or Standard 11 gal. or CB2902 Master or Standard 14 gal. or CB2901 Master or Standard 15 gal.

11) Fuel manifold part number **F366** is to be used **ONLY** with Cameron baskets:

Model	**Size**	**Part Number**	**Serial Numbers**
Aristocrat	48x72	CBUS301 (-5) Iss C & E	8800 & greater
Flat Top	48x72	301-5FSH	
Flat Top	48x72	301-5FWH	
Flat Top	48x72	301-5FSR	
Flat Top	48x72	301-5FWR	

using any of the following fuel tank combinations: (See Figures 2, 4, 5 & 6 for orientation)

Left Side	Right Side
CB250 Master or Standard 10 gal. or CB599 Master or Standard 11 gal. or CB426 Master or Standard 15 gal. or CBUS1050 Master or Standard 15 gal. or CB2380 Master or Standard 15 gal. or CB2900 Master or Standard 11 gal. or CB2902 Master or Standard 14 gal. or CB2901 Master or Standard 15 gal.	CB599 Master or Standard 11 gal. or CB426 Master or Standard 15 gal. or CBUS1050 Master or Standard 15 gal. or CB2380 Master or Standard 15 gal. or CB2900 Master or Standard 11 gal.or CB2902 Master or Standard 14 gal. or CB2901 Master or Standard 15 gal.

12) Fuel manifold part number **F367** is to be used **ONLY** with Cameron baskets:

Model	**Size**	**Part Number**	**Serial Number**
Aristocrat	48x72	CBUS301-5 Iss. A,B,C & E	All Numbers for All Issues

using any of the following fuel tank combinations: (See Figures 1 & 3 for orientation)

Left Side	Right Side
CB250 Master or Standard 10 gal.	CB250 Standard 10 gal. ONLY

13) Fuel manifold part number **F368** is to be used **ONLY** with Cameron baskets:

Model	**Size**	**Part Number**	**Serial Numbers**
Flat Top	48x72	301-5FSH 301-5FWH	8800 & greater

using any of the following fuel tank combinations: (See Figures 2, 4, 5 & 6 for orientation)

Left Side	Right Side
CBUS1060 Standard 20 gal. or CB959 Standard 20 gal. or CB2903 Standard 20 gal.	CBUS1060 Standard 20 gal. or CB959 Standard 20 gal. or CB2903 Standard 20 gal.

14) Fuel manifold part number **F369** is to be used **ONLY** with Cameron baskets:

Model	**Size**	**Part Number**	**Serial Numbers**
Flat Top	48x72	301-5FSH 301-5FWH	8800 & greater

using any of the following fuel tank combinations: (See Figures 2, 4, 5 & 6 for orientation)

Left Side	Right Side
CB250 Master or Standard 10 gal. CB599 Master or Standard 11 gal. Or CB426 Master or Standard 15 gal. Or CBUS1050 Master or Standard 15 gal. Or CB2380 Master or Standard 15 gal. CB2900 Master or Standard 11 gal. or CB2902 Master or Standard 14 gal. or CB2901 Master or Standard 15 gal.	CBUS1060 Standard 20 gal. or CB959 Standard 20 gal. or CB2903 Standard 20 gal.

15) Fuel manifold part number **F370** is to be used **ONLY** with Cameron baskets:

Model	**Size**	**Part Number**	**Serial Numbers**
Flat Top	48x72	301-5FSH 301-5FWH	8800 & greater

using any of the following fuel tank combinations: (See Figures 2, 4, 5 & 6 for orientation)

Left Side	Right Side
CBUS1060 Standard 20 gal. or CB959 Standard 20 gal. or CB2903 Standard 20 gal.	CB599 Master or Standard 11 gal. or CB426 Master or Standard 15 gal. or CBUS1050 Master or Standard 15 gal. or CB2380 Master or Standard 15 gal. CB2900 Master or Standard 11 gal. or CB2902 Master or Standard 14 gal. or CB2901 Master or Standard 15 gal.

16) Fuel manifold part number **F395** is to be used **ONLY** with Cameron baskets:

Model	**Size**	**Part Number**	**Serial Numbers**
Aristocrat	48x72	CBUS301 (-5) Iss C & E	8800 & greater

using any of the following fuel tank combinations: (See Figures 2, 4, 5 & 6 for orientation)

Left Side	Right Side
CB250 Master or Standard 10 gal. or CB599 Master or Standard 11 gal. or CB426 Master or Standard 15 gal. or CBUS1050 Master or Standard 15 gal. or CB2380 Master or Standard 15 gal. or CB2900 Master or Standard 11 gal. or CB2902 Master or Standard 14 gal. or CB2901 Master or Standard 15 gal.	CB250 Standard 10 gal. ONLY

17) Fuel manifold part number **F380** is to be used **ONLY** with Cameron baskets:

Model	**Size**	**Part Number**	**Serial Numbers**
Flexible	40x48	CB300 (-3)	All Numbers
Flexible	40x54	CB300 (-4)	

using any of the following fuel tank combinations: (See Figures 2, 4, 5 & 6 for orientation)

Left Side	Right Side
CB250 Master or Standard 10 gal. or CB599 Master or Standard 11 gal. or CB426 Master or Standard 15 gal. or CBUS1050 Master or Standard 15 gal. or CB2380 Master or Standard 15 gal. or CB2900 Master or Standard 11 gal. or CB2902 Master or Standard 14 gal. or CB2901 Master or Standard 15 gal.	CB599 Master or Standard 11 gal. or CB426 Master or Standard 15 gal. or CBUS1050 Master or Standard 15 gal. or CB2380 Master or Standard 15 gal. or CB2900 Master or Standard 11 gal.or CB2902 Master or Standard 14 gal. or CB2901 Master or Standard 15 gal.

18) Fuel manifold part number **F381** is to be used **ONLY** with Cameron baskets:

Model	**Size**	**Part Number**	**Serial Number**
Flexible	40x48	CB300 (-3)	All Numbers
Flexible	40x54	CB300 (-4)	

using any of the following fuel tank combinations: (See Figures 1 & 3 for orientation)

Left Side	Right Side
CB250 Master or Standard 10 gal. or CB599 Master or Standard 11 gal. or CB426 Master or Standard 15 gal. or CBUS1050 Master or Standard 15 gal. or CB2380 Master or Standard 15 gal. CB2900 Master or Standard 11 gal. or CB2902 Master or Standard 14 gal. or CB2901 Master or Standard 15 gal.	CB250 Standard 10 gal. ONLY

The manifolds listed on the previous pages are designed to be used without burner hose modification. Once installed in the basket, these manifolds may or may not be connected into the fuel system of the balloon for a particular flight. However, **BOTH** manifold hoses **MUST** be connected **OR, BOTH** manifold hoses **MUST** be disconnected.

NOTE:
IT IS NOT PERMISSIBLE TO OPERATE THE AIRCRAFT WITH ONLY ONE MANIFOLD HOSE CONNECTED TO THE FUEL SYSTEM.

INSTALLATION OVERVIEW

Installation of the manifold into the basket **MUST** be done by an **FAA certified repair person**. Proper logbook entries must be made.

Proper installation is important to prevent failure of the manifold if the system is exposed to high impact forces. Proper installation is also important to prevent damage to the manifold in flight, ground handling and transport.

The manifold(s) **MUST** be installed according to these instructions. The manifold **MUST** be positioned in the basket to prevent stress from ever being placed on the hoses and to prevent the hoses from being pinched or rubbed by the tank collars, basket walls or any other part.

The hardwood spacing block and nylon cable ties are integral to the proper function of the manifold. They **MUST** be used and no other parts may be substituted for them. One of the functions they perform is to provide a degree of electrical insulation to help prevent electrical damage to the fuel system. Another function is to intentionally provide a mechanically weak point in the manifold mounting system. This weak point will help prevent damage to the fuel hoses due to basket distortion, which results from high impact forces.

PARTS LIST

_____ 1. Manifold assembly

_____ 2. Hardwood spacing block

_____ 3. 6 nylon wire ties, 15"-long (2 required + 4 extra)

INSTALLATION INSTRUCTIONS

_____ 1. **Complete** Parts List to verify all necessary parts are included.

_____ 2. **Verify**, via the basket I.D. plate, the basket Part Number.

_____ 3. **Verify**, via the number engraved and or stamped on the back of the manifold block, the manifold Part Number.

_____ 4. **Confirm** the manifold, basket and tank configuration are compatible.

_____ 5. **Install** the fuel tanks in the basket end, with tank covers if they are to be used.

_____ 6. **Tighten** the tank straps tightly to assure the tanks are fitted snugly into the basket corners.

_____ 7. **Connect** the manifold to both tanks per figure 1 to 6. Rotate the tanks as necessary to avoid kinks or twists in the hoses.

_____ 8. **Position** the manifold block so that the fuel hoses make smooth bends to the tank valves (the smooth bends in the hoses provide excess hose length. The extra hose length is necessary to protect the fuel system from damage due to basket flexing caused by high impact). Mark the location for the block. See figure 8.

_____ 9. Mount the manifold in the position determined in step 8. Use two 5/16"nylon cable ties to snugly attach the manifold to the basket wall. See figure 7. The extra cable ties are included in case of breakage or a mounting mistake.

_____ 10. Trim the ends of all nylon cable ties used in step 9.

_____ 11. Inspect the installation:

_____ a. There are no kinks or twists in either hose.

_____ b. There is a smooth bend in each hose to provide excess length.

_____ c. The hoses are not touching anything over their entire length.

_____ d. Both cable ties are snugly tightened.

_____ 12. In the balloon flight manual add four pounds to the basket weight for each manifold installed.

_____ 13. Make the appropriate aircraft log entry documenting the installation.

INSTALLATION ASSISTANCE

For assistance or advice relative to the installation of this manifold contact Cameron Balloons US at:

Voice (734) 426-5525
FAX (734) 426-5026
email techsupport@cameronballoons.com

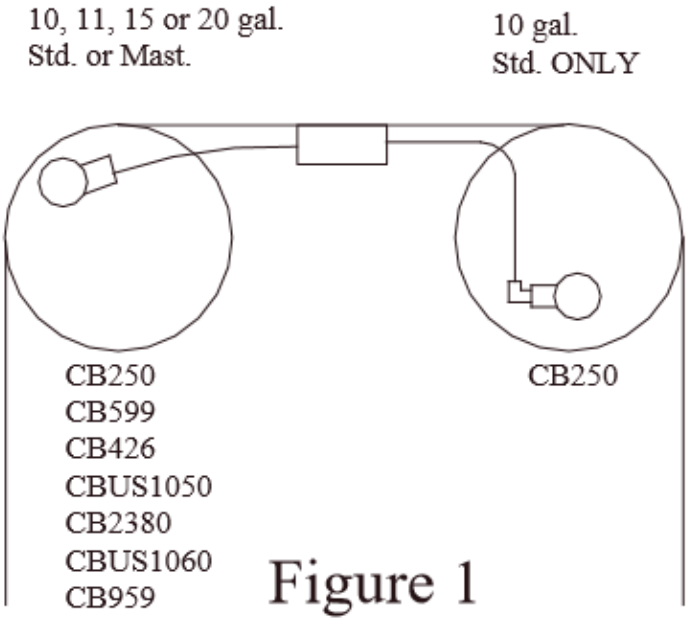

Figure 1

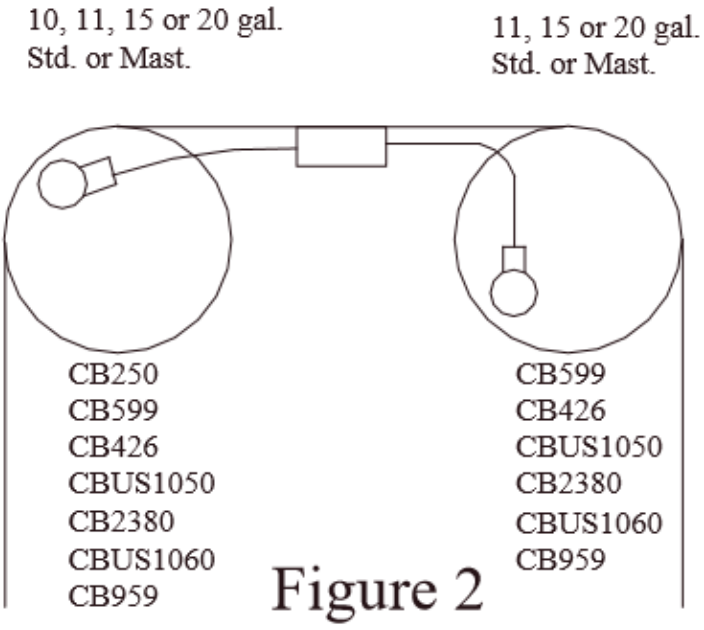

Figure 2

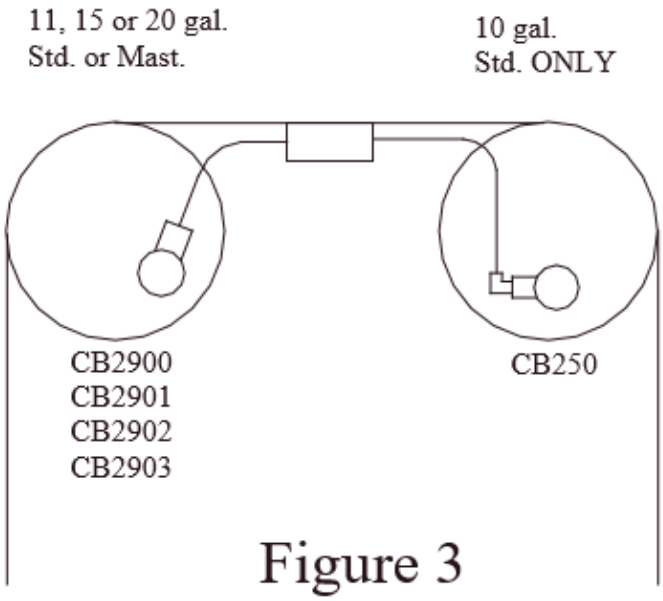

Figure 3

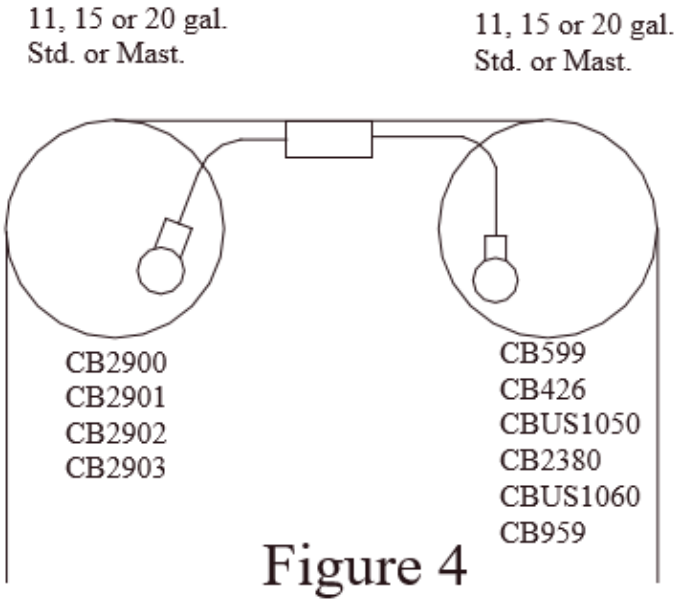

Figure 4

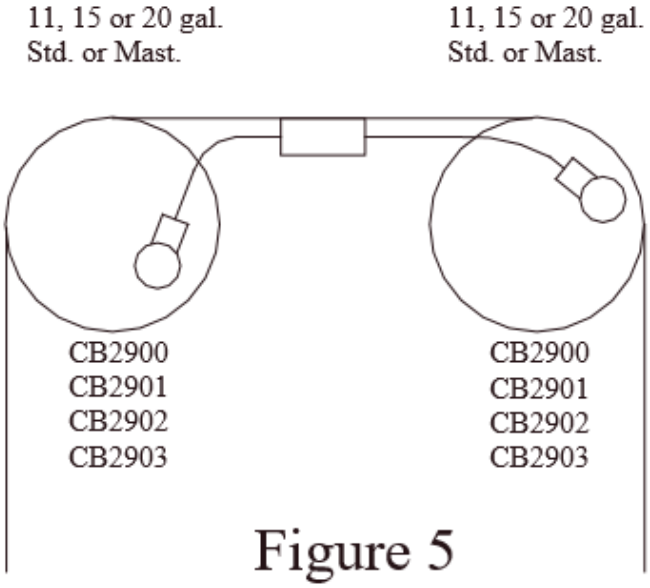

Figure 5

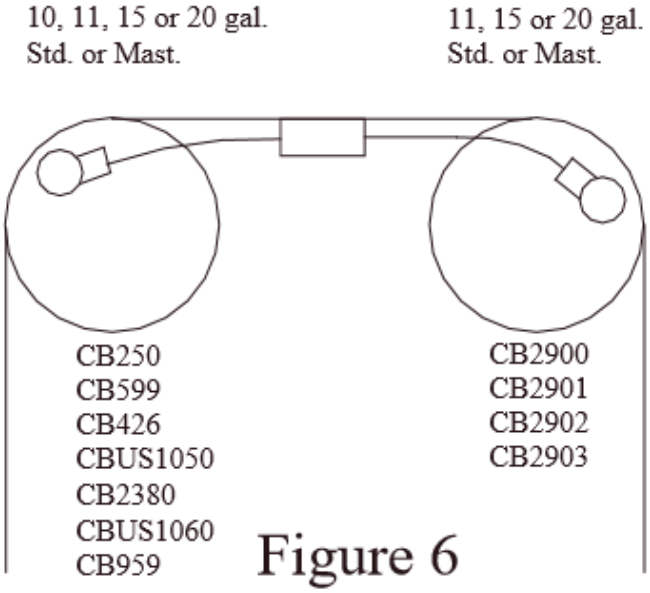

Figure 6

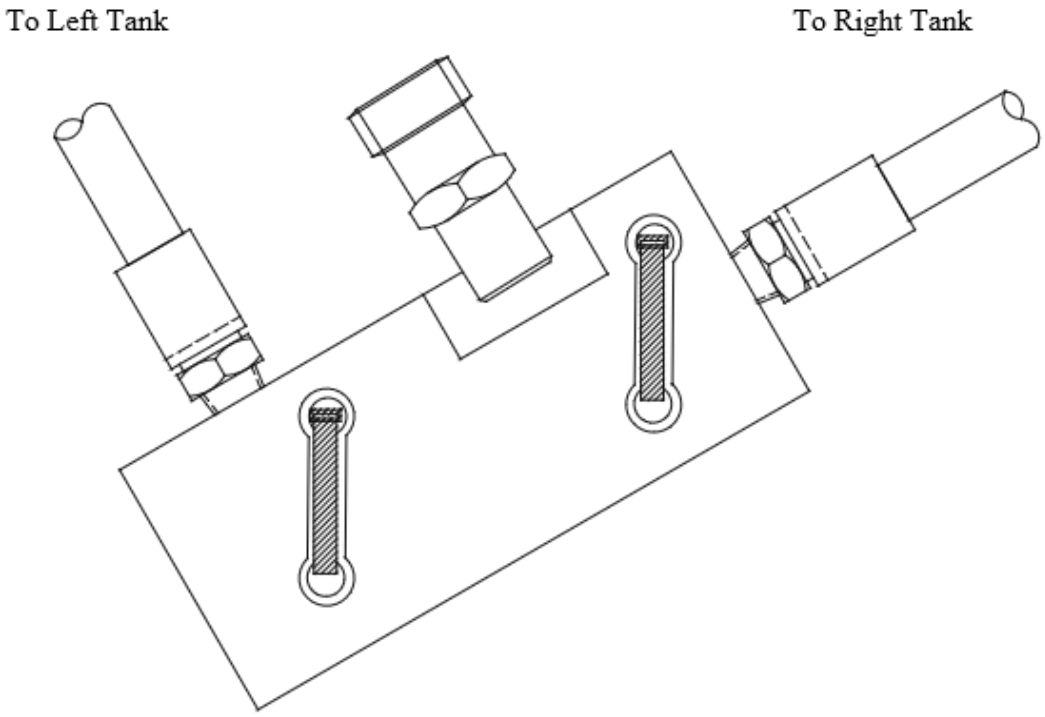

Figure 7
(View from Inside of the Basket)

25.5” ± 1” from the lowest point of the manifold block to the top of the center skid.

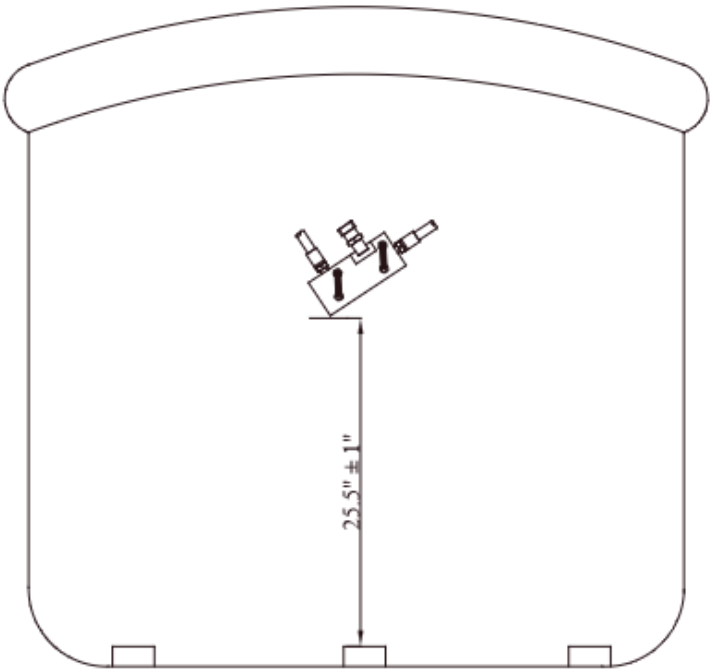

Figure 8
(View From the Inside of the Basket)

Fuel hose indentification (''Appendix Y'')

APPENDIX Y
FUEL HOSE INDENTIFICATION

GENERAL DESCRIPTION:

The release to service date is etched on both ends of the fuel hoses. If no etching is present on the end fittings, the date on the rubber part of the hose should be used. If there is no date on the hose then the date that the system was put into service should be used to date the hoses.

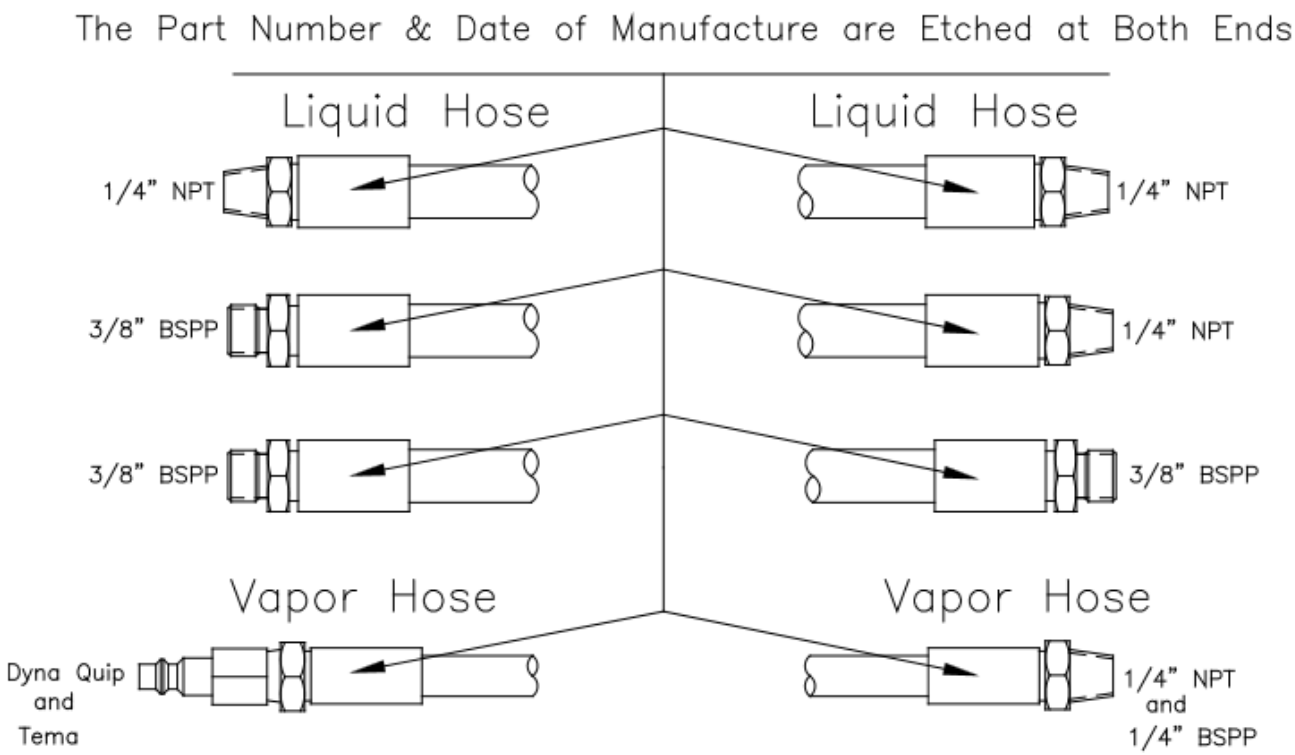

SECTION 10 – SUPPLEMENTS

List of applicable Service Bulletins:

(All service bulletins can be found on www.cameronballoons.com)

Service bulletin 1 (1986)
Blistering of fuel manifold hose outer cover

Service bulletin 3 (1987)
Incorrectly assembled hose end connectors

Service bulletin 4 (1988)
Incorrectly-spliced inflation harness ropes

Service bulletin 5 (2005)
Cracking of a weld on gimbal block framed Ultra Triple burner mounting bracket

Service bulletin 6 (2008)
Fuel system, Liquid valve self-seal coupling

Service bulletin 8 (2008)
Triple and Quadruple gimbal block burner frames – weld inspection

Service bulletin 9 (2009)
Vapor pilot light hose male quick connect fitting cracks

LET US HELP YOU!

In case that you have any suggestion, difficulty, problem or comment, please contact our technical department at:

technical@kubicekballoons.cz

+420 545 422 638

BALÓNY KUBÍČEK spol. s r. o. e-mail: sales@kubicekballoons.cz • www.kubicekballoons.eu Seat: Brno 61400 • Jarní 2a • Czech Republic tel.: +420 545 422 620, • fax: +420 545 422 621