BALÓNY KUBÍČEK spol. s r.o.
Seat: Jarní 2a, 614 00 Brno
Czech Republic
tel.: +420 545 422 620
fax: +420 545 422 621
info@kubicekballoons.cz
www.kubicekballoons.cz

Maintenance Manual Supplement

Lindstrand Balloons USA Baskets and Burners

Type: .....

Model: .....

Serial No.: .....

Registration: .....

This balloon Maintenance Manual Supplement is initially approved by EASA under major change approval number 10070614, dated 26 July 2019.

Subsequent revisions are approved either by EASA or by authority of DOA, no. EASA.21J.277 as detailed on page USBEL-3.

This balloon Maintenance Manual Supplement is approved in accordance with 14 CFR Section 21.29 for U.S. registered aircraft and is approved by the Federal Aviation Administration. Initial date of approval: 31 July 2019.

This balloon is to be preserved in an airworthy condition in compliance with instructions and information contained herein.

INTENTIONALLY LEFT BLANK

0.1 Record of revisions

Any revision of this Manual must be recorded in the following table.

Revision Number	Affected Section	Affected Pages	Date of Issue

Revisions to this Manual are published on the Kubicek balloons web site at www.kubicekballoons.eu.

The new or amended text in the revised page is indicated by a black vertical line in the outer margin, and the revision number and the date is shown on the bottom of the page.

CAUTION	Mandatory revisions are introduced by a Service Bulletin published on the Kubicek Balloons web site www.kubicekballoons.eu.

INTENTIONALLY LEFT BLANK

Contents

SECTION 1 – GENERAL

1.1 INTRODUCTION

This is a Maintenance Manual Supplement for the use for balloons combining Lindstrand Balloons USA bottom-end with Kubicek Balloons envelope.

This supplement was created by adopting applicable pages of the original Maintenance Manual by Lindstrand Balloons USA, Issue 2, Amendment 4, March 2018. The original Maintenance Manual is available from www.lindstrand.com.

1.2 APPLICABILITY

All balloons combining Lindstrand Balloons USA bottom-ends with Kubicek Balloons envelopes.

1.3 MAINTENANCE CATEGORIES

DOCUMENTATION OF WORK

Any preventative maintenance work carried out by the balloon owner or operator, in accordance with the instructions contained within the Sections 4, 5 and 6 of this Maintenance Manual Supplement, or within FAR Par 43, Appendix A, Paragraph c, must be documented with an entry in the balloon logbook, which includes the following information:

- A description of the work performed
- The date of completion of the work performed
- The name and pilot certificate number of the person who made the repair or approved it
- The total number of hours on the balloon when the work was performed

It should be noted that the owner or operator of the balloon must hold a current pilot certificate issued under FAR Part 61, in order to undertake preventative maintenance and to sign the aircraft logbook. For further details, refer to FAR 43.

WARNING	Installation of any non-approved parts or materials, the modification of any aircraft part, or the utilization of a non-approved repair method could result in a hazardous condition, which could result in death or injury.

(source: Maintenance Manual, Issue 2, Amendment 4, March 16, 2018 – Lindstrand Balloons USA; page 1, Section 4, chapter 4.1 Paperwork Documentation)

1.6 Definitions and Abbreviations

LBUS (LB)	Lindstrand Balloons USA
MM	Maintenance Manual
MMS	Maintenance Manual Supplement

1.7 Balloon Technical Description

BASKETS

All Lindstrand baskets are made from wicker (see Appendix 6, Figure 3.2.1) and have either a solid plywood floor or a wicker woven floor. This floor is strengthened and protected on the underside by

the addition of three or four runners, depending upon the size of basket.
In plywood floor baskets, the wickerwork is woven between two tubular stainless-steel frames. These frames provide strength and stability to the wickerwork. The marine plywood floor is laced onto the lower stainless-steel frame. This permits the basket floor to be replaced if necessary. All loads are carried by ¼" (6 mm) stainless steel wires which form a continuous sling around the basket. These wires are of 7x19 construction. The wires are attached to the burner frame by a carabiner. They then pass down to the top of the basket, running adjacent to a nylon pole, through a sleeved hole in the top frame. The wires pass through the wickerwork and then through sleeved holes in the bottom basket frame. They pass through and across the wooden floor, under the runners. The wires are locked into one of the runners by providing a recessed hole in the runner in which sits an extra swaged ferrule. The portion of the basket wires above the top frame is protected by a PVC covering.
The joint between the bottom basket frame and the floor is protected by rawhide or bottom scuff leather that is stapled and/or laced onto the floor and wickerwork respectively. Extra rawhide or leather strips are stapled over the basket wires where they run across the bottom of the plywood floor to provide protection.
Woven floor baskets have only a top stainless-steel frame. Two ¼" (6 mm) stainless steel wires from the carabiner attachment at the burner frame pass through sleeve holes in this frame. The cables follow nylon rods woven into the basket and exit on the opposite side forming a continuous sling around the load.
Smaller baskets have a minimum of two stainless steel wires, which run down the vertical walls and across the bottom of the basket. In larger baskets, there are four separate stainless basket wires. The top basket frame has four upward facing sockets welded in place. Four nylon rods are inserted into these sockets and into similar downward facing sockets on the burner frame. This provides a rigid support for the burner frame and burner. The nylon rods, basket wires and burner hoses are covered with padded covers to prevent damage.
The top basket frame is covered with dense foam and then finished with suede leather or cordura, which is laced on.
Within the weave of the basket are included rope handles, both internally and externally. The internal handles are provided for occupants to hold onto during landings.
Larger baskets are internally segmented to provide greater comfort for occupants. Partition walls are normally made from wicker and may be reinforced with large nylon verticals or wicker stakes. The lightweight partitions are formed by a matrix of webbing anchored into the steel top frame and bolted through the wooden floor and runners covered by padded walls. All Lindstrand solid plywood basket floors have a minimum of two holes drilled to permit fluids to drain through the floor. On larger baskets, the internal walls are often padded. Internal padding sections are laced into place. The top basket frame has four or eight upward facing sockets welded in place. Nylon rods are inserted into these sockets and into similar downward facing sockets on the burner frame. This provides a rigid support for the burner frame and burner. The nylon rods, basket wires and burner hoses are covered with padded covers to prevent damage.
Strengthened belt holes are created within the wickerwork to permit various items such as fuel cylinders, instruments and flight bags, to be restrained in position during flight.
2 Cylinder straps are used to restrain each fuel cylinder in place.
A wide variety of sizes of baskets are available. Smaller open baskets may have a straight top or swept profile with either sunken or protruding nylon pole sockets. All partitioned baskets are straight topped with protruding nylon pole sockets and have plywood floors (see Appendix 6, Figure 3.2.2).
The easy access basket variants have a vertical hinged, outward opening door introduced in the side of the basket and may have an upward swinging top bar in the upper stainless-steel basket frame. (see Appendix 6, Figure 3.2.3) The door is constructed from a stainless-steel tubular frame usually with

standard woven wicker fill. In some cases, a sheet of polycarbonate material may take the place of the woven wicker fill. Two footstep holes are provided on the opposite side of the door to permit additional entry and exit. The basket may be equipped with extra footstep holes on the short side of the basket at owner's request. The top bar is hinged on one side and latched by the use of a push / pull release pin at the other end (see Appendix 6, Figure 3.2.4). To rotate the top bar the release pin is removed, and the bar is rotated upwards. Once in the upright position another stopping release pin is provided at the hinge end of the top bar. This pin is inserted through the hole provided close to the hinge to prevent the top bar from dropping down unintentionally (see Appendix 6, Figure 3.2.4). Note that the push pull release pins are operated by pushing or pulling on the figure eight shaped ring. The reaction of pushing or pulling releases the locking ball mechanism.
The door is secured in the closed position by an upper and lower drop latch. Latches may be manufactured on the interior or exterior of the basket depending on the customer preference. The drop latch is retained in the closed position by the addition of a safety hook which should be inserted through the lower part of the latch (see Appendix 6, Figure 3.2.4). (source: Maintenance Manual, Issue 2, Amendment 4, March 16, 2018 – Lindstrand Balloons USA; pages 2 and 3, Section 3, chapter 3.2 Baskets)

BURNERS

The burners applicable for combining with KB envelopes come in a variety of configurations ranging from a JetStream Double to JetStream Quad burner and the Vortech Double. The burner is a device for heating and directing air into a hot air balloon envelope. It can be fueled by any aliphatic hydrocarbon, provided there is sufficient pressure in the fuel storage vessels to provide the required fuel flow. The preferred fuel is commercial quality liquid propane (BS 4250 1975).
Fuel is supplied in the liquid form, from the cylinder to the main burner block, via an armored hose. It enters a chamber in the main distribution block. The chamber provides fuel supply to the main vaporizing coil valve, the liquid fire valve, the pilot light regulator and the pressure gauge. On the downstream side of the main blast valve is another valve which when turned on, allows fuel to flow into a multi-orificed jet. The burner is also fitted with a high voltage piezo electric spark igniter. The larger burners suitable for larger envelopes are essentially multiple copies of the single and/or double burners.
For convenience, the most common burner sizes, the JetStream double (see Appendix 6, Figure 3.4.2) and the Vortech (See Appendix 6, Figure 3.4.5), will be described.
Overview of the JetStream Double Burner (Series 1) (see Appendix 6, Fig. 3.4.2)
Overview of the JetStream Double Burner (Series 2) Toggle Action (see Appendix 6, fig. 3.4.3, 3.4.3.1)
Overview of the JetStream Double Burner (Series 2) Squeeze Trigger (see Appendix 6, fig. 3.4.4 and 3.4.4.1, 3.4.4.2)
Overview of the Vortech Double Burner Squeeze Trigger (see Appendix 6, fig. 3.4.5, 3.4.5.1, 3.4.5.2, 3.4.5.3)
The JetStream double burner is a variation of the single burner where the independent fuel circuits are separate and each feeds its own vaporizing coil. This allows true doubling of the power output of the single burner.
The Vortech is a burner where the independent fuel circuits are separate and each feeds its own vaporizing coil. All control surfaces and pressure gauges on the bottom of the burner block.
The <u>Squeeze Trigger Double, Triple and Quad Burner</u> – it differs from the toggle style in that the main valves are actuated by a lever attached to the valve spindle than to a fixed fulcrum point. When the lever is depressed the valve is actuated. The squeeze grips are recessed into a bar handle, which also acts as the main means of maneuvering the burner. (JetStream burner see Appendix 6, fig 3.4.4) (Vortech Burner see Appendix 6, fig 3.4.5)

Main Burner Block – the burner is designed around a circular valve block. mounted below the burner can. All valves, the coil assembly & the fuel supply lines attach to this block. In the JetStream Super Single burner, the block is so designed that two independent and isolated fuel distribution circuits are provided. In other models of the JetStream burner two of these blocks may be joined to incorporate a cross-over valve.

The Main Vaporizing Coil is manufactured from 7 meter of 12.7 mm OD stainless tubing, arranged in a two-start winding. It is of the conventional flow direction, with the fluid rising to the top of the coil and then descending into the square section jet ring. The jet ring is equipped with 28 jets in the JetStream burner a majority of which are 1.3 mm diameter and the remainders are 1.6mm diameter and 32 jets in the Vortech burner all of which are 1.3 mm Diameter.

Main and Liquid Fire Valves are of an identical basic design but produced so that the valves are of two differing lengths, in order to distinguish between the two different functions. The valves are of a plunger type with a handle attached by a rotating joint to a spindle. In the toggle version when the handle is moved from a horizontal plane into a vertical plane, the spindle is lifted. In the squeeze trigger version, when the squeeze trigger is actuated the spindle is lifted. The spindle is attached to a valve seat by another rotating joint. When the spindle is lifted, this lifts the valve seal away from the valve seat, allowing fluid to flow through the valve. The fluid is prevented from leaking to atmosphere by the presence of a spring energized TEFLON piston seal, situated on the spindle. This type of seal has low friction and the internal spring ensures that even at low temperatures and pressures, there is sufficient radial compression to achieve 100% sealing. The design of the seal body itself is such that with increasing differential pressure, the radial sealing force increases. An extra seal is also provided further up the spindle which prevents the ingress of contamination. Due to the action of the toggle style handle on the spindle, there are forces that act in a radial direction on the spindle. For this reason, a bush is included at the top of the spindle to resist these horizontal forces. The bush is manufactured from a composite metal matrix, including a sintered bronze base filled with a TEFLON lead mixture. This bearing provides excellent lubrication and does not require servicing. The valve spindle can be rotated independently of the valve seal, thus permitting the handle to be positioned as required by the pilot. The position of both the valve handles is on the lower base of the burner. This allows either handle to be used from any position in the basket with an operating action that does not cause excessive pilot fatigue. The difference in general style, size and texture of the handles permits the pilot to select the type of burner that is required during flight, without having to look upwards.

The pilot valve handle has been designed for easy operation, even when wearing heavy gloves. The outer rim of the handle and the main block have both been engraved, clearly showing the function of the valve and its position. (I = ON and O = OFF). In principle, the operation of the regulator has been arranged to provide high reliability with compactness. The function of the pilot valve and regulator have been combined so that the valve operates by over-riding the open/close action of the regulator. The regulator is of the piston type to ensure small size. Two cleanable filters are also included in the regulator design, with a filtration size of 50 micron. One is situated before the inlet to the regulator and the other is positioned just before the pilot light jet. These filters prevent jet blockages.

The pilot light itself is of the "Bunsen Burner" type, which has excellent resistance to wind gusts and good high-altitude performance.

Two piezo igniter assemblies are fitted. A high voltage igniter is provided in the burner, contained within a waterproof heat resistant housing. The electrode is made from special steel which is highly resistant to prolonged high temperatures. The complete igniter assembly is sealed on the main block to prevent the entry of water.

Two pressure gauges are fitted. The gauges are completely isolated from each other and as such monitor the fuel pressure only in the fuel circuit to which it is dedicated.

A tailor-made pressure gauge is fitted into a recessed cavity within the main block, to provide an

indication of the fuel pressure. It is connected into the main liquid feed and thus will provide an indication of pressure as soon as the cylinder valve is turned on. The gauge dial has a green sector marked upon it, which shows the correct operating pressure of the burner. A flow restrictor is included in the passageway that feeds the pressure gauge. This prevents damage to the gauge and tends to reduce vibration of the pointer, allowing for improved readability.

Cross Over Valve is a highly reliable "sandwich" type ball valve. The handle used is of the same design as the pilot light valve, to permit easy use even when wearing gloves. It is engraved with the internationally recognized symbols O = Off and I = On. These are aligned with a triangular datum marking on the valve block itself. The reverse face of the cross over valve may be engraved with the burner serial number.

The liquid fire nozzles are situated inside the can. The liquid fire nozzle is situated adjacent to the pilot light inside the burner can. It is operated by opening the appropriately marked valve on the main burner block. It produces a stream of liquid propane which burns slowly, thus producing less noise than the main burner. It provides redundancy on all burners and serves as a quiet burner when flying close to livestock. Jetstream Double, Triple and Quad (see Appendix 6, item (1) fig 3.4.3.1 and 3.4.4.1), Vortech (see Appendix 6, item (4) Fig 3.4.5).

The Commercial Liquid Fire (CLF) burner is a more powerful version of the liquid fire, producing approximately 3.7 MW of power at a supply pressure of 7 bar.

It consists of a modification to a standard JetStream burner, involving the removal of the main vaporizing coil and the insertion of a special 12 jet nozzle which fits onto the main coil post in the center of the burner. In association with this, the operating valve handle is colored red and the relevant engraving on the burner block changes to "CLF". In most cases, the normal liquid fire assembly is removed from the CLF burner in its entirety, and special machined blanks are inserted into the resulting holes.

The basic burners that the CLF may be fitted into are the JetStream Triple and Quad burners, in which they are described as the JetStream Double plus CLF and JetStream Triple plus CLF, respectively. The CLF burner is normally situated in a burner that is close to the pilot, to permit easy operation.

The hydraulic remote control enables the Lindstrand range of JetStream burners to be operated in the conventional manner or by a remote handheld lever. The system includes a low spill quick release coupling which enables the lever assembly to be removed for storage.

The JetStream Triple burner is based upon the double burner, with the addition of a specially manufactured third burner, to form a delta shape. The third burner is normally "slaved" to one of the other burners, in that there is a mechanical linkage which is provided between the main valve handle on one of the master burners, and the valve handle on the slave burner. This permits the slave burner to be operated in concert with one of the master burners. When the Triple is fitted with a Double-T basket, this mechanical linkage is optional.

If the cross-over valve is opened on the master burner which has the mechanical cross linkage attached to it, then all three burners may be operated from one handle. Two liquid fire units are provided on the master burners.

The mounting arrangement for both the Triple burner and the Double plus CLF variant is slightly modified to take account of the natural weight imbalance. One axis of rotation is provided in a central hub, while the other axis of rotation is achieved at the ends of an offset support tube. There are two settings provided at the ends of the support tube. One is for the Triple burner and the other for the Double CLF burner.

The JetStream Quad burner is a straightforward duplication of the double burner, with a few additions. As for the other multi-burners, mechanical linkages which may be selected off or on are provided to connect the main blast valve of each burner unit. By using these linkages in association with the standard cross-over valves, all four burner coils may be operated from one burner handle. The

mounting arrangement for the burner is modified so that both axes of movement are provided on a central hub. The force required to move the burner is adjustable by a variable friction housing incorporated within the central hub. (source: Maintenance Manual, Issue 2, Amendment 4, March 16, 2018 – Lindstrand Balloons USA; pages 13-16, Section 3, chapter 3.4 Burners)

FUEL SYSTEMS

The LPG (Liquid Petroleum Gas) fuel is stored within special lightweight cylinders for in-flight use. The fuel is stored under sufficient pressure to ensure that it is in the liquid form. (see Appendix 6, Figure 3.3.1).

Liquid Withdrawal System consists of a tube that descends almost to the bottom of the cylinder. It is attached to a valve boss and connector at the top of the cylinder. When the valve is open and with a suitable supply hose connected, the internal pressure forces liquid out of the cylinder. The liquid valve may be a screw type or a ball type (Quarter-turn) valve. The connector is either the hand-threaded or hydraulic hose type.

The contents gauge is centrally mounted in the top dome of the cylinder. There is a float attached to a rotating arm. Changing levels of liquid in the cylinder cause the arm to rotate. A geared system links this movement to a magnet mounted in the top of the gauge. This magnet causes the needle within the dial to register the remaining contents. The length of gauge is different for differing sizes of cylinder.

The pressure relief valve may be integral within a vapor withdrawal valve, or separately mounted in a boss on the top dome of the cylinder. Irrespective of the type, the principle of operation is the same. A powerful spring holds a cone type valve in place, preventing any leakage. When the internal pressure of the cylinder reaches a pre-determined level, the cone valve is forced away from the sealing surface, thus allowing the pressure to escape. The set level for all cylinders is 25 bar (375 psi) and this prevents the cylinder rupturing explosively when the pressure increases.

Maxfill (Ullage) Valve is a small screw valve attached to a long tube, which extends into the top dome of the cylinder. It is opened when the cylinder is being refueled to permit the operator to determine when the cylinder is full. This is achieved by watching for the presence of liquid escaping from the valve. The length of the attached dip tube varies with the size and type of cylinder, to ensure that a 15% of volume vapor space is left when the cylinder is full.

Cylinder Jackets – different size and type of cylinder may be covered with a padded cordura fabric jacket. This jacket protects the cylinder and also provides cushioning for the occupants in an open type basket. The cylinder jacket may also have resistance heating wire incorporated into it, or heat tapes may be attached directly to the tank. When this heating wire is connected to a suitable supply source (either 240V or 110V), it heats the outside of the cylinder, causing the vapor pressure of the fuel to increase. This aids burner performance in low ambient temperature conditions.

Fuel manifolds may be used for the convenience of the pilot to provide interconnection between cylinders in the basket. This allows changing from one fuel supply to another without disconnecting the burner hoses from a cylinder to re-connect to another cylinder in-flight.

The manifolds consist of female connectors appropriate to the type of cylinders being used, and in the number of cylinders which require interconnection. Hoses and adapters provide the connection between the cylinders. A male connector is provided in a suitable location for connection to the burner hose. **Only manifolds manufactured by Lindstrand Balloons may be used with their balloons.**

(source: Maintenance Manual, Issue 2, Amendment 4, March 16, 2018 – Lindstrand Balloons USA; pages 3 and 4, Section 3, chapter 3.3 Fuel Systems)

A further description of the balloon, its systems, controls and equipment is provided in the Kubicek Balloons Flight Manual Supplement (document no. B.3105-FMS_USBEL), section 6.

SECTION 2 - AIRWORTHINESS LIMITATIONS

2.5 Life Limited Items

The inspection interval for Lindstrand balloons is 100 hours of operation, or one year; whichever is the sooner. Any items with a service life limitation must be replaced once the time set is reached. The old item must be discarded with in accordance with the appropriate authority regulations. Note of the change of parts must be recorded in the balloon logbook.

Component	Limit
All fuel hoses	10 years **in service** This includes main burner hoses and manifold hoses

The inspection procedure can be found in Appendix 5 of this supplement.

SECTION 3 - ENVELOPE REPAIRS AND MAINTENANCE

No change.

SECTION 4 - BASKET REPAIR AND MAINTENANCE

BASKETS

Cleaning, Storage and Re-varnishing

The best method of preserving the basket in good condition, is to ensure that it is stored correctly between flights. The preferred storage environment for baskets is in a cool, dry area. Hot dry areas should be avoided as the wickerwork tends to dry out and can crack more easily. Equally, damp areas should be avoided as this can cause rot. If hot temperatures are unavoidable, it is recommended that the wicker is regularly soaked with water.

Cleaning the wicker is best achieved in the same way. Mud which has dried onto the exterior can be removed using a garden hose washer from inside the basket. The padding on the baskets can be cleaned using a suitable suede or leather cleaner as appropriate. It is best to keep the basket free of dirt. This is simply achieved by removing all basket equipment, cylinders, cushion floor, etc. and removing any collected debris by a vacuum cleaner. Pay particular attention to the joint between the bottom basket frame and the plywood floor. The cushionfloor foam can be cleaned using detergent and water.

The baskets may be re-varnished to renew the protective layer. A good quality flexible varnish should be brushed on to the exterior wickerwork only. Avoid varnishing over the rope handles or suede/leather covering.

NOTE	Avoid high pressure spray washers, they may damage the natural rattan and possibly strip the natural protective outer layer off. To avoid trapping moisture, do not replace the cushionfloor and fuel tanks until the basket is completely dry.

Basket Upholstery

If the suede or leather trim covering the padding on the top frame is torn, it can be repaired as follows: Remove the damaged section of leather by carefully unlacing the cord holding the trim on to the basket. Cut a patch of replacement leather of the correct color, which is 5/8" (15 mm) larger than the damaged section. Glue and/or stitch the patch on to the underside of the damaged section. Also, stitch the edges of the hole or tear on to the patch to avoid fraying at the edges. Replace the leather on the

basket, lacing into place. Another option would be to remove the covering and sew a replacement piece and re-lace the bolster into place.

(source: Maintenance Manual, Issue 2, Amendment 4, March 16, 2018 – Lindstrand Balloons USA; pages 3 and 4, Section 4, chapter 4.3 Baskets)

SUSPENSION SYSTEM

Non-certified persons may replace the carabiners with parts provided by Lindstrand Balloons USA (EN1000 OR EN1907) as original equipment replacement parts. Substitution of carabiners except as specified in the type design is prohibited.
Nylon poles must be replaced with Lindstrand Balloons supplied poles only. No other material may be substituted.

(source: Maintenance Manual, Issue 2, Amendment 4, March 16, 2018 – Lindstrand Balloons USA; page 4, Section 4, chapter 4.3.3 Suspension System)

For maintenance and repair instructions for baskets and suspension systems, see Appendix 3 of this Supplement.

SECTION 5 - BURNER REPAIRS AND MAINTENANCE

The burners are the engine of the hot air balloon, and consequently should be stored with care. Ideally it should be stored suspended within the basket so that it cannot hit other items. A padded burner bag is available for small and medium framed burners. You should avoid traveling for long distances, or short distances over rough terrain, with the burner erected on its nylon rods.

CAUTION	Traveling with the burner erected on the nylon rods is not advised. It will subject it to repeated jarring and can damage the burner. The burner frame, associated connectors to the burner, and the upper basket frame. If this is unavoidable, a thorough inspection of the burners, all connectors, toggle valve handles, burner-toframe interface, frame-to- rod interface and rod-to-basket interface is advised prior to the next flight.

The burner may be placed on soft ground, resting on the burner coils, to assist in the insertion of the burner rods. Hard surfaces should be avoided wherever possible at this stage. Care should be taken when dismantling the basket and burner assembly to avoid dragging unprotected connectors on the ground. It is recommended that the connector dust cap is always fitted to the connector before the burner is taken down.
During the operation of the burner, there is inevitably an accumulation of carbon deposits (soot) within the coil and can of the burner. Regularly available aerosol glass cleaners with ammonia (i.e. Peek, Windex) wiped with a soft cloth will remove these deposits. Heat discoloration of the coils can be removed using products such as Blue Away and SemiChrome designed for cleaning of motorcycle exhaust systems.

Adjustment of Slurper Tube on the JetStream burner	See instructions in Appendix 4, Section 5.4.8
Piezo Ignition Unit Adjustment	See instructions in Appendix 4, Section 5.4.7

<u>Hydraulic Remote Burner Control</u>
The handheld lever assembly should be removed and stored in a manner, which prevents damage to the assembly and hoses when not in use. During normal operation, the lever assembly can be adjusted

to give the most comfortable feel and to remove any slack in the system by tightening or loosening the two set screws on the lever.
(source: Maintenance Manual, Issue 2, Amendment 4, March 16, 2018 – Lindstrand Balloons USA; pages 5 and 6, Section 4, chapter 4.5 Burners)

For maintenance and repair instructions, see Appendix 4 of this MMS.

SECTION 6– FUEL CYLINDERS REPAIRS AND MAINTENANCE

Generally, the flight cylinders require little specific attention throughout their service life, provided that the following instructions are followed.
Although the cylinders are strong, care should be taken when moving them. Ensure that when the cylinders are placed on rough, uneven ground, that the cylinder is resting on the footring and not on the dome of the cylinder itself. Since the footring on titanium tanks is strapped to the body of the cylinder rather than welded extra care should be taken when handling.

CAUTION	Avoid dropping cylinders on hard surfaces as this may dent or distort the footring.

It is best to transport the cylinders standing upright. Transporting cylinders on their sides should be avoided and could cause irreparable damage to their internal components. Cylinders should always be restrained from movement during transportation.
Cylinders may be washed using detergent and water. Remove tank covers prior to washing.

Connectors

Both threaded and hydraulic hose types of liquid connectors are provided with dust caps. These should be fitted over the male half of the connector which is situated on the cylinder to prevent the accumulation of dirt in the connector. Both styles of connector have an integral seal that prevents the flow of liquid propane if the female half of the connector is not connected. The connector is situated downstream of the main on/off liquid valve and there is the possibility of liquid becoming trapped between the valve and the connector seal if the fuel hoses are disconnected without bleeding the lines. If this trapped liquid is not vented, subsequent temperature increase will cause expansion, which tends to cause the seals within the connector to fail. It is a good habit to depress the connector nipple before the cylinder is stored.
To prolong the life of the seals within the connector and to ease the connection process, it is a good habit to regularly lubricate the whole connector (both male and female halves). The recommended lubricant is silicon grease, in either the solid or spray form. However, if the balloon is operated in a dusty or sandy environment, the recommended lubricant is a dry type such as graphite powder.

Fuel Hoses

If a burner fuel hose or manifold fuel hose requires replacement, the first action is to measure the hose length, as shown in (see Appendix 6, figure 4.4.3.) Dismantle the manifold by unscrewing the various connectors from each end of the hose. Carefully note the types of end fittings on the hose and into which connectors the end fittings were screwed. Order a pre-fabricated replacement hose from the factory, specifying the measured length and the required end fittings. When reassembling the replacement hose, new sealing washers must be used with the 3/8" BSP male threads. 1/4" NPT threads should be sealed using medium thread lock compound or Teflon tape applied to the male thread only. Once the assembly is complete, the whole manifold should be carefully tested for pressure

integrity.
(source: Maintenance Manual, Issue 2, Amendment 4, March 16, 2018 – Lindstrand Balloons USA; pages 4 and 5, Section 4, chapter 4.4 Fuel System)

For maintenance and repair instructions, see Appendix 4 of this MMS.

SECTION 7 – INSTRUMENT REPAIRS AND MAINTENANCE

No change.

SECTION 8 – INSPECTION SCHEDULE

8.1 General

This section describes inspection schedule for all balloons combining Kubicek Balloons envelopes with CBUS bottom-ends (basket, burner, burner frame and fuel system).

8.2 Scheduled Inspections

1. Balloons: 100 hour/annual inspection
2. Fuel hoses: 10- year inspection

8.4 100 Hour/Annual Inspection

For the 100 hour/annual inspection of balloon combining KB envelope with CBUS bottom-end, the same checklist as for inspecting KB balloon must be used (the 100 Hour/Annual Inspection Checklist - see Appendix 2 of the main MM, document number B.3205).

8.15 Inspection Criteria / Techniques

Check that all applicable service bulletins and ADs (KB's for the envelopes and LBUS's for the bottom-end assembly) have been followed and recorded in the balloon's logbook. A list of Service Bulletins which may apply to the balloon can be found on the KB's website. If there is no entry in the logbook of a relevant Service Bulletin being completed, contact KB.

8.15.3 Baskets

For inspecting of the basket, see Appendix 5 of this MMS.

8.16 Fuel Cylinders

8.16.2 Annual / 100 hour inspection

For inspecting of the fuel cylinders, see Appendix 5 of this MMS.

8.19 Non-scheduled Inspections

8.19.3 Hard Landing Inspection

Should a hard landing be experienced where damage to the LBUS bottom-end is suspected, carry out a 100 Hr/Annual Inspection (following the full checklist) before the next flight. Any damage found resulting from the hard landing that prevents the balloon passing a 100 Hr/Annual Inspection must be reported to Lindstrand Balloons USA to determine the appropriate action. The balloon must not be flown until it is capable of passing a 100 Hr/Annual Inspection.

8.20 Life Limited Items

See chapter **2.5 Life Limited Items** of this supplement.

SECTION 9 – APPENDICES

APPENDIX 3 – BASKET AND SUSPENSION SYSTEM MAINTENANCE AND REPAIR INSTRUCTIONS (''Section 5'')

The kevlar cords should be cut with a pair of scissors, or sharp knife, and an overhand knot tied at the end to prevent fraying. When refitting the cords, note which mark is aligned with the loop on the parachute and on the envelope. Hold the correct mark in place and secure the line by tying an overhand loop knot as shown in Figure 5.1.2.5. Once complete, the parachute positioning is checked by pulling the vertical tape very tight between the parachute opening and the centralizing line attachment point. While the vertical tape is held tightly, pull the parachute toward the crown ring until all slack is out of the centralizing line. This requires very little tension, line should not be stretched. There should be 10" (25cm) of overlap of parachute inside the envelope.

5.1.2.6 Parachute Pull Down Lines

In the unlikely event that these lines require repair, remove the damaged line from the edge of the parachute. One length of cord runs from a loop on the edge of the parachute down to the pulley and back up to the adjacent loop on the parachute edge. Once removed, measure the overall length of the line. Cut a replacement length of polyester cord (EN1869) and heat seal the ends with a hot knife or lighter. Fold the line into two equal lengths and tie a loop at the mid point. Retie the resulting ends of the pull down lines to the loops on the edge of the parachute and re-attach the loop to the quicklink. Ensure that the screw gate of the quicklink is secure using medium strength thread locker.

This part is not applicable for balloons combining UM bottom-ends with KB envelopes.

For envelope repairs refer to KB Maintenance Manual.

The polyester outer covering of the parachute operating line must be a red and white (candy-stripe) 50/50 spiral. The polyester outer covering of the center pull deflation line operating line is solid red. No deviation from this color scheme is permitted. Lindstrand envelopes are only fitted with a $^{5}/_{16}$" (8 mm) kevlar cored polyester braided covering line. Replacement line must be of this specification.

For damage near the basket end or shrinkage, an additional loop of line is provided at the termination side in the envelope. This loop can be let out to compensate for damage in approximately the lower 5-8 feet of line. If the parachute or Q-Vent deflation line becomes excessively frayed, the line should be replaced in its entirety.
Undo all knots in the line and withdraw the line from the envelope. Contact the factory for the original length installed. Replacement of the line is the reverse of removal (see Figure 5.1.2.7 for rigging formats). The final securing to the loops sewn onto the envelope should be with a knot as shown in Fig. 5.1.2.5).

5.1.2.8 Rip Lines

Operating lines for the velcro rip panel are $^{5}/_{16}$" (8 mm) kevlar-cored polyester braided line, or 1/4 poly or nylon braid-on-braid line, either which is solid red in color. No deviation from this color scheme is permitted. The replacement line must be of this specification. Undo all knots in the line and remove the line from the envelope. Contact the factory for the original length installed. Fit the new line in exactly the same way as the old line. Once complete, inflate the envelope and deflate it using the replaced line to ensure that it operates correctly.

5.2 Baskets

5.2.1 Basket Wires

If more than ten strands of a basket wire are broken, or if the wires are badly kinked, then a new section of wire must be spliced into the structure. The swaging process used in original manufacture is the Talurit system, using copper ferrules code no. 6.5 and stainless steel thimbles code no. 11-46. Alternatively, the Nicopress process, described in FAA document EA-AC 43-13-1A and 2A may be used, provided that the wire and ferrules are compatible.

5.2.1.1 Damage Above Basket Top

If the damaged portion of wire is at least 2" (50 mm) above the top level of the basket, a new section of wire can be added as follows:

a. Cut off the existing eye of the wire, just below the ferrule.

b. Remove the PVC covering by sliding it off.

c. Cut a length of replacement wire that is sufficient, remembering to add approximately 8" (200 mm) to create a new eye.

d. Cut away the damaged section of wire.

e. Swage the new section of wire onto the remaining existing wire. Cover swaged area with heat shrink.

f. Slide a new section of PVC tubing over the wire.

g. Erect the burner frame and attach all other basket wires. Form an eye using the correct thimble and ferrule. Adjust the length with the assembly in its correct position. Mark the wires next to the ferrule. Remove the wire from the frame and swage.

h. Apply heat shrink tubing over the ferrule.

5.2.1.2 Damage Below Basket Top

If a basket wire is unacceptably damaged below the level of the top frame, you can either splice in a wire or install a complete new wire. A splice as described above can be made within the woven portion of the basket, or, the procedure for installing a complete new wire is as follows:

a. The top bolster and rawhide/scuff leather may have to be removed as well as any clamps securing the cable within the weave. Two are located at the bottom curve of the nylon uprights and one at floor center.

b. Cut away the damaged cable below the damaged area. Butt weld a length of new cable to the old. File welded area so diameter will pass through guides in the stainless basket frame/s.

c. Lubricate the entire length of both old and new wires with silicone spray.

d. Pull undamaged swaged end of old cable, which will in turn pull new cable with it throughout basket. It is helpful to secure the basket or place a large amount of weight in the basket.

e. With new cable in place, cut away old cable, clean cable of lubricant and swage a new eye, following the procedures in Section 5.2.1.1.

f. Replace the top bolster and/or rawhide or bottom scuff leather.

5.2.2 Basket Top Frames

If the top frame of a basket becomes distorted, it may be repaired by using hydraulic jacks to straighten it. If rod sockets become distorted, these can be straightened by inserting a close fitting steel bar into the socket and bending straight again. If the top frame is cracked, it should be re-welded using a TIG welding set (Heliarc). The padding must be removed completely and the wicker moved aside to permit access.

5.2.3 Basket Floors - Plywood

If a floor is damaged so that a 10" crack is visible on both sides of the floor, i.e. the floor has cracked through, then it either must be patched or replaced totally. Patching is achieved by cutting a piece of similar thickness plywood, which covers the cracked area and bonding it over the crack from the underside, using wood glue. Note that any protective varnish must be completely removed from the damaged area by sanding, prior to bonding the patch in place. Small tacks may be used to hold the patch in place while the glue is drying.

The wooden runners may be bonded to the basket floors for greater damage resistance. The bond strength is always greater than the wood strength, so removing runners from the floor is difficult. If a runner is damaged to the extent where it is no longer providing strength, then another runner may be placed alongside and attached to the floor in a similar manner as the original.

Replacement of the floor is achieved by the following procedure:

a. Remove all rawhide or bottom scuff leather from the basket cables across the underside of the floor.

b. Pull the basket cables back through the floor so that there is 4" (100 mm) of slack in each wire.

c. Unlace or cut the lacing holding the bottom frame onto the marine plywood floor.

d. Cut slots into the sides of the plywood floor to release the wires from the floor.

e. Cut slots into each of the runners to remove the wires from under the runners. Alternatively, the runners can be removed from the floor.

f. Slide floor out from under the wires.

g. If a replacement floor is being manufactured, it is best to use the old floor as a pattern for the hole positions. The holes through the floor which accept the basket wires, must be elongated into slots towards the edge of the floor to allow the existing wires to be replaced.

h. New ash, oak or maple runners must be fitted in the same positions as the old. The underside face must be cut away with a router to provide a passageway for the wires. The runners may be bonded onto the floor of the basket using wood glue and are also bolted together into recessed holes in the runners. The bolt pattern should be taken from the old runners.

i. The remainder of the rebuild process is essentially the reverse of dismantling. Rawhide should be soaked in water for at least 24 hours so that it is sufficiently pliable to ensure a close fit around the edges of the basket and over the basket wires.

5.2.4 Wicker Repairs

Distortion of wickerwork does not affect the airworthiness of a basket. Excessive distortion can be removed by soaking the wicker in water for 48 hours and then placing a weight on the distorted area. The weight should be sufficient to remove the distortion. The wicker is then allowed to dry for another 48 hours with the weight in position. Once the wicker has dried for four or five days, it can be re-varnished using a good quality flexible varnish. Hard coating varnish should not be used as it cracks off the wicker quickly.

In the case of the woven wicker floors the runners are bolted through the wicker and interior plywood surface. The runners may be removed to facilitate repairs to the floor area. All runners have nylon UHMW strips on their bottom surface held in place by stainless steel screws.

Sometimes wickerwork will crack or break leaving sharp ends or edges which could cause injury. Inspect the interior and exterior of the basket for any damage to the wicker. If more than 4 vertical strands of wicker out of 12 consecutive vertical strands are broken they must be repaired. If more than 12 horizontal strands in a 24 inch by 24 inch area are broken they must be repaired. If a hole in the wicker exists larger than 2.5 inches at the widest dimension, it must be repaired. In woven floor baskets, any broken primary rattan (approx. 3/4 inch) supports must be replaced.

If any reweaving is necessary, soak the area around the damage and any new cane. Use a dull pointed tool to assist in feeding the new cane into the old. Copy the weaving pattern from the surrounding area to provide a neat repair. The cane should be cut to length as close as possible to the outside wall using side-cutters. Quite often, repaired sections of wicker are lighter in color than the surrounding cane. Once the repair is complete, allow the cane to dry. The wicker can then be varnished locally around the repair.

5.2.5 Rope Handles

If the rope handles become excessively frayed or are broken, they can be replaced by reweaving either an individual or complete set of handles. Removal is achieved by first marking the rope at the ends of each area to be replaced and cutting the damaged handle in the middle. Extract the rope handles from the weave using a dull pointed instrument, such as a screwdriver. Completely remove the handle rope and use it as a guide to cut a new length of rope, adding 4" (100 mm) to each end. Reweave the rope into the basket, taking care not to damage the wicker. The rope terminations are fed vertically up into the weave, normally in one of the basket corners. Interior handles are 5/8" (16 mm), exterior handles are 1" (25 mm). When replacing only a section, the same 4' (100 mm) tail should be left on the remaining rope and this too is fed vertically into the weave. A portion of the core may be removed to lessen the bulk of these tail ends.

5.2.6 Easy Access Basket Repairs

If it becomes difficult to remove the top bar release pin, the basket top frame can be gently pushed back with the door open such as the two holes in the machined fork end and plate re-align. The four hinge points should be lubricated with a light lubrication oil whenever necessary.

APPENDIX 4 – BURNER AND FUEL SYSTEM MAINTENANCE AND REPAIR INSTRUCTIONS (''Section 6'')

5.3 Fuel Systems

5.3.1 Fuel System Safety

When considering any work on fuel cylinders or fuel manifolds, it is important to ensure that there is no fuel remaining anywhere in the system. Fuel manifolds can be evacuated by connecting to a burner and operating the blast valve to expel any remaining liquid, or by depressing the sealing valve in one of the manifold connectors.

Fuel cylinders may be emptied by either burning off all remaining fuel or transferring fuel to another cylinder.

Once the cylinder is empty of liquid, open the bleed valve and leave the cylinder in an open, well-ventilated area until all remaining pressure has been removed. At this point fuel level gauges and or valves may be removed and replaced as needed.

WARNING!
REMOVE FUEL BEFORE INSPECTING THE INTERIOR OF A TANK. COMPLETE THE INSPECTION OUTDOORS AWAY FROM ANY POSSIBLE IGNITION SOURCES.

December 1, 2011 Version 1.8 Section 5 Page 10 of 22

5.3.2 Inspecting Cylinders Internally

a. Internal Inspection

The most effective way of conducting an internal inspection on a cylinder is through the contents gauge hole using a flashlight or a small battery powered light, which can be lowered into the tank. Inspect all the internal welds. If there is any evidence of corrosion or pitting of the surface surrounding the welds, a hydrostatic pressure test must be conducted to ensure the integrity of the cylinder.

b. Once the cylinder has been inspected, put 8 oz. of methanol into the cylinder. Refit the contents gauge using a new rubber seal. Lubricate the rubber seal with silicon grease to ease the assembly.

5.3.3 Liquid Withdrawal Valves

5.3.3.1 Screw Valves

There are several types of screw valves that are used on cylinders and although they all operate in the same way, care must be employed when obtaining replacement parts because the components are not always interchangeable.

There are two seals within the 1¼" ACME (Rego type) screw connector which seal the connection when the male half of the connector is in position, and if any leaks occur when the two are joined, these seals should be replaced. The outer seal is square in section and the inner round. The inner seal is removed using a piece of wire to hook behind it, taking care not to scratch the housing. Prior to replacement, the seals should be lubricated with silicon grease. Both seals must be present and in good condition in order to achieve a leak tight connection.

If a leak occurs when the valve is open but the hose is disconnected, this means that the self-sealing nipple is faulty. Sometimes, connecting the male half in order reseat the nipple can stop the leak. However, if this does not stop the leak, the self-sealing nipple must be replaced. (The self-sealing nipple is not available as a spare part for some makes of screw valves). The retaining disc is unscrewed and the nipple removed.

Replacement is the reverse of this process. Any other faults with the valve cannot be repaired and the whole valve must be replaced. The cylinder must be completely emptied to achieve this.

When replacing the screw valve, ensure that any excess flow device is removed prior to fitment.

5.3.3.2 Ball Valves

Only one type of ball valve is used on the cylinders, the Worcester W44 valve. It may be configured with either a 1¼" ACME screw connector (commonly called the 'Rego' connector, after the original manufacturer), or a Tema ⅜" connector. In both cases, servicing of the valve itself is identical. There are two potential areas to be serviced with this valve:

a. Stem Leaks This can be recognized by liquid propane leaking out beside the nut, underneath the handle. Commonly, it can be rectified by removing the handle and holding the stem still using an open-end wrench. With another wrench, the nut on the stem is tightened by ⅛ - ¼ of a turn. If this stops the leak, the valve handle is replaced and no further action is necessary. If the leak cannot be stopped, or the movement of the handle is unacceptably stiff, the valve must be disassembled and new seals inserted.

b. Ball Seal Leaks The ball valve must be dismantled to replace the ball seals or the stem seals and the cylinder must first be completely emptied.

Unscrew and remove the four retaining bolts. Carefully separate the faceplate from the valve. Remove the two seals situated on both sides of the ball, taking care not to scratch the body of the valve. Inspect the ball carefully for any dents or scratches. The ball can be removed from the valve by turning the handle into the off position. Unscrew both nuts on the valve stem and remove the handle. The stem can now be removed by withdrawing it into the valve and out one side. This reveals the glands on the stem, which can be replaced. The ball seals are simply placed on either side of the ball during reassembly. Silicon grease should be applied onto the seals and the ball, the grease assisting to hold the seals in place while the two sides of the valve are replaced. The nuts on the four retaining bolts should be tightened in a diagonal pattern to a torque of 9 lbs ft (12.2 Nm). The stem nut should be tightened to a torque of 3.5 lbs ft (4.75 Nm).

5.3.3.3 Liquid Connectors

Two types of liquid connector are used, the Rego or Tema types.

The procedure for servicing the Rego 7141M type of connector is identical to the repair of the 1¼" ACME screw valve, as described in Section 5.3.3.1.

The Tema 3800M connector has no serviceable components and should be replaced if found to be faulty. This is a simple matter of unscrewing the old and screwing on the new. New gaskets must be used. Ensure that the liquid valve is turned off before unscrewing the connector.

5.3.4 Vapor Valves

If a vapor valve malfunctions it is necessary to replace the whole valve as there are no serviceable components with the valve. The cylinder must be completely emptied prior to removal of the valve.

5.3.5 Vapor Regulators

The outlet of the vapor valve is fitted with a left-hand POL thread. The regulator is screwed into this outlet. Regulators are set to 8 psi at the factory. The pressure setting can be altered in the following manner:

a. BMV Type Regulator

Remove the blue plastic blanking plug on the regulator. Insert the suitable size of hexagonal wrench (allen key). Turning the wrench clockwise increases the pressure, and anti-clockwise reduces the pressure.

b. Calor Type Regulator

Unscrew the locking nut situated on the threaded thumbscrew. Turn the thumbscrew clockwise to increase the pressure. Re-tighten the locking nut when the correct delivery pressure is reached.

For normal flight conditions, the regulator delivery pressure should not need adjustment. If poor delivery is causing a weak pilot light flame, it is more likely that the regulator has malfunctioned and should be replaced in total.

5.3.6 Bleed Valve (15% Valve)

The bleed valve controls the maximum amount of fuel that the cylinder can carry. If it leaks, it must be replaced in total, for which the cylinder must be emptied. The dip tube length for V20 is 170mm; V30 is 190mm; and V40 cylinders is 225 mm. When replacing the bleed valve use either teflon tape or Medium thread locking compound on the thread.

5.3.7 Contents Gauge

Each different type of cylinder is fitted with a different gauge and care must be taken to ensure that the correct type is fitted. The indicating dial on top of the cylinder can be replaced by unscrewing the two retaining screws and fitting a replacement. Any other work on the gauge requires the cylinder to be completely vented. If problems are encountered, it is best to check whether the float is moving by inverting the cylinder and listening for the movement of the float. If the float is moving and there is no indication, replace the dial and re-test. If there is still no movement of the pointer, the gauge must be removed and replaced with a new one. There are no serviceable items on the gauge itself.

5.3.8 Cylinder Bodies

If the cylinder pressure vessel body is damaged in any way, it must be submitted to the factory or a qualified inspector for assessment. Damage to the top and bottom protective rings is not important provided that there is no damage to the join between the cylinder body and the rings. Under no circumstances must welding be performed on the cylinders to repair damage, unless undertaken by the manufacturer.

5.3.9 Cylinder Straps

Cylinder (Tank) straps are used to restrain the fuel cylinder in place. Special care must be taken to place cylinder straps in the appropriate position on the cylinder to avoid ejection of the cylinder in a hard landing. (upper tank strap over top shoulder of tank) (See Figure 5.3.9)

5.4 Burners

When any work is performed on the burners, it is very important to ensure that a high standard of cleanliness is achieved. Components should be cleaned and dried with soft lint-free cloth, or left to dry naturally.

Once any type of service work has been performed on the burner, a functional test must be conducted to ensure there are no fuel leaks within the burner. Each burner function is tested to ensure correct operation. A soap solution or commercial leak detector may be applied to all threaded connections to detect very small leaks.

5.4.1 Hose Replacement

All fuel hoses must be replaced after 10 years **in service.** (which will usually differ from the hose manufacture date). This includes main burner hoses and manifold hoses. With the burner held steady; unscrew the hose at the entry point into the burner block. Once loosened, it is best to unscrew the hose by holding it straight and turning the connector on the end of the hose. If the connector is serviceable, it may be removed by unscrewing from the other end of the hose. Pre-fabricated hose replacements are available from the factory in differing lengths. Measure the length of the existing hose and order a replacement (see Figure 4.4.3). Ensure that the correct hose end fittings are selected to suit the particular type of liquid connector.

	Hose End Fittings	
Connector Type	Burner End	Cylinder End
Rego 7141 F	3/8" BSP Male	¼" NPT Male **or** 3/8" BSP Male
Tema 3800 F	3/8" BSP Male	3/8" BSP Male

When reassembling the replacement hose, new sealing washers must be used with the 3/8" BSP male threads. 1/4" NPT threads should be sealed using medium thread lock compound or teflon tape applied to the male thread only. Once the hose has been fitted, the hose must be pressure tested for integrity.

5.4.2 Servicing Valve Assemblies

These instructions apply to all the toggle type valve assemblies, which control the flow to either the main vaporizing coil or to the commercial liquid fire (CLF), or the normal liquid fire unit. The only difference between the two types of valve assembly is the length of the valve stem.

There are 4 different styles of handles associated with the valve assemblies. The first is the "T" bar handle on the JetStream single burner. The second is the standard toggle action style found on all burner types. The third type is the squeeze trigger found on the JetStream double, triple, quad. The fourth type is the squeeze trigger found on the Vortech burner.

5.4.2.1 Single Burner "T" bar handle.

Servicing the main burner valves in the Single Burner requires removal of the burner "T" bar handle. The numbers indicated in brackets ( ), refer to the ballooned item numbers on Fig.3.4.1 and Fig.3.4.1.1.

To remove the Main Valves proceed as follows:

a) Using a 5mm allen key, undo and remove the two-hexagon drive cap head screws (21) fig. 3.4.1 Lift away the handle (12) fig. 3.4.1

b) Carefully remove the 4 keep plates (14) fig.3.4.1.1 from the handle post (13) Fig.3.4.1.1.

c) Remove the two pivot pins (16) fig. 3.4.1.1, using a suitable narrow probe accessed through the two holes in the side of the handle post (13) Fig. 3.4.1.1.

d) Lift away the handle post. Note that the two main valve squeeze triggers (19) and (20) will lift away with the handle post.

e) Remove the pivot pin (17) fig 3.4.1.1 from the handle post (13) fig 3.4.1.1, using a narrow probe accessed from the central hole in the side of the handle post.

f) The squeeze triggers (19) and (20) fig 3.4.1.1 may now be lifted away.

g) Undo the two main valves (15) fig 3.4.1.1 using a 28 mm open-ended wrench and remove from the valve block.

Further valve maintenance is as described in Section 5.4.2.2 of the Maintenance Manual. Re-assembly is generally the reversal of the dismantling process taking care to align the dowels in the handle (12) with the dowel holes in the handle post (13). Apply Medium thread locking compound to the cap head screw threads (21) before re-assembly.

5.4.2.2 Toggle Action (found on all styles of burners)

All the numbers in brackets refer to the item numbers on Figure 5.4.2.

Use a 27, 28 or 32 mm wrench to unscrew the complete valve assembly from the burner. It is recommended that the faces of the valve bonnet be covered with masking tape or balloon fabric to prevent scratches on the valve assembly.

a) Move the valve handle (1) into a vertical position so that the valve is in an open position.

b) On the underside of the valve handle (1) are two set screws (2).

c) Loosen these two set screws but do not remove them.

d) Close the valve handle again and gently push the pivot pin (3) out to one side of the handle. This will release the handle from the valve stem (4). The pivot pin does not need to be completely removed from the handle.

e) Once the handle has been released, re-tighten one of the set screws onto the pivot pin to retain the pivot pin in the correct alignment.

f) Remove the nylon thrust washer (5) from on top of the valve assembly and store safely. It should be noted that these thrust washers (5) are not always interchangeable between valve assemblies. It is recommended that only one valve assembly be dismantled at any time.

5.4.2.3 JetStream Squeeze Trigger

To remove the main squeeze action valves, proceed as follows:

a) Using a 4 mm Allen Key, undo and remove the four hexagon drive cap head screws and crinkle washers, Items 14 and 16, Figure 3.4.4.1

b) Using a 2 mm AF Allen Key, undo and remove the eight hexagon drive counter sink screws, Item 13, Figure 3.4.4.1

c) Remove the handle tube, Item 2, Figure 3.4.4.1 from the upper valve posts, Item 3, Figure 3.4.4.1

d) Remove the upper and lower valve posts.

e) Using a pair of circlip pliers, remove the circlip, Item 12, Figure 3.4.4.1 NOTE: It is very difficult to remove the circlip without damage to the circlip. It is a good idea to have replacement circlips available before you start the service. (Part Number BU2094).

f) Remove the pivot pin, Item 11, Figure 3.4.4.1, from the blast trigger cam.

g) The blast trigger may now be removed. Take care to retain the spring and spring cap, Items 10 and 9, Figure 3.4.4.1, respectively, within the blast trigger cam.

h) Remove the main valve assembly, Item 8, Figure 3.4.4.1 from the valve block using a 32mm wrench. It is recommended that the faces of the wrench are covered with masking tape or balloon fabric to prevent scratch damage to the valve bonnet.

i) Remove the thrust washer from the recess in the top of the valve bonnet. Note that the thrust washers are not always interchangeable between valve assemblies. It is recommended that only one valve assembly is dismantled at any time.

Further valve maintenance is as described in Section 5.4.2.2 of the Maintenance Manual. Re-assembly is generally the reversal of the dismantling process. Reference Figure 3.4.4 and Figure 3.4.4.1

5.4.2.3.1 Vortech Squeeze Trigger

To remove the handle and main squeeze action valves, proceed as follows:

a) Insert rod (small Phillips screwdriver or hex wrench) through holes in either side of the handle assembly and valve stem, Figure 3.4.5,2 . The valve stem may be rotated via hex screw "A" to gain alignment of all three holes. The rod will prevent rotation of the stem in order to remove hex screw "A" and both spacers under it. Remove hex screw "A" from the valve on each burner.

b) Remove (4) hex screw "B", 2 at each burner valve. This will allow the complete handle assembly to be removed exposing both main valve bonnets.

c) Remove bonnets using a 27 MM wrench

Further valve maintenance is as described in Section 5.4.2.2 of the Maintenance Manual. Re-assembly is generally the reversal of the dismantling process.

5.4.2.4 Replacing Valve Seals

Carefully withdraw the valve stem (4) and seals from the valve bonnet (6). Gently push the stem seal (7), washer (8), spring (9), and seat carrier sleeve (10), up the valve stem (4). This permits the removal of the seat carrier (11) from the valve stem (4). Inspect the sealing surface of the valve seat for any damage or foreign bodies.

Normally, there is a circular indentation where the seat rests on the main valve block. Inspect this area in particular, for any cuts or damage. If the sealing surface is damaged, the complete seat carrier (11) must be replaced.

Remove the stem seal (7), washer (8) and spring (9) from the valve stem (4), taking care not to scratch the valve stem. The quad ring seal (12) is removed by carefully sliding a piece of wire down the side of the seal and hooking it under the seal. Lift the seal out of the recess on the stem and slide it off the stem. Note that if this seal (12) is removed, it must not be replaced. A new seal must always be fitted on re-assembly.

Inspect the valve stem (4) for any signs of scratches or damage. Scratches are best detected by running a fingernail over any marks. If the scratch can be felt, then the stem must be replaced. Frequently there are slight wear marks along the shaft where the stem seal (7) contacts the shaft. These wear marks do not necessarily mean that the shaft or stem seal require replacement.

If a valve stem leak is experienced, then the stem seal (7) and quad ring seal (12) must be replaced. If the leak continues, then the valve stem should be replaced.

Re-assembly is generally the reversal of the dismantling process. Ensure that the stem seal (7) and the quad ring seal (12) are lubricated with grease prior to installation. There is no particular orientation for the quad ring seal, but the lip seal must be mounted on the valve stem so that the helical spring, visible inside the seal, is facing towards the seat carrier end of the valve stem.

When replacing the valve assembly into the block, one or two wraps of teflon tape should be applied to the valve assembly threads and ensure that the copper sealing washer (13) is present. When replacing the pivot pin (3) in the handle, make sure that the set screws (2) are screwed down on to the machined flat of the pivot pin (3).

5.4.3 Servicing the Pilot Light

The pilot light is supplied with vapor from the pilot light regulator. It is situated within the burner can. If a pilot light failure is experienced, it is usually due to debris blocking the pilot light jet. To prevent this happening, a small filter is inserted into the feed to the jet.

The numbers in brackets refer to the item numbers on Figure 5.4.3.

The pilot light is removed by first withdrawing the igniter assembly (1) down into the burner block. Unscrew the igniter retaining set screw (2), which is located in the side face of the main burner block (3). Push the complete igniter assembly (1) out through the bottom of the burner block (3). Remove the pilot light cup (4) by loosening the set screw (12). Insert a screwdriver, which has a thin shaft, through two opposite holes in the pilot light assembly (5). Unscrew the pilot light assembly (5) to reveal the pilot light jet (6). Unscrew the pilot light jet (6) using a ¼" socket.

If the pilot jet is held up to a bright light, the hole should appear round. If not, clean the jet in a solvent such as kerosene and blow it clean with compressed air to clear the jet of any blockage. If this procedure does not dislodge the blockage, a very fine piece of wire may be inserted into the jet and used to push any obstruction out.

The pilot light filter (7) is accessible by unscrewing the jet adapter (8) from the burner block, using a (19 mm) socket. The filter is situated in the upstream end of the adapter and is a sintered bronze filter. It is possible to clean this filter by soaking the complete adapter in kerosene and then blowing back through the filter with an air hose. However, if the filter is heavily blocked, it is recommended that this filter be replaced.

Re-assembly of the pilot light system is the reverse of the dismantling process.

Ensure that there is a copper washer (9) under the pilot light jet (6) when it is screwed into the jet adapter. Once the complete pilot light assembly has been fitted, replace the igniter unit (1). The pilot light cup (4) should be repositioned so that the grounding tab (10) for the igniter is positioned directly above the igniter electrode (11). The gap between the electrode and the grounding tab should be $^{3}/_{16}$" (4 mm). A slightly larger gap usually results in a stronger spark than a gap that is less than indicated.

5.4.4 Servicing the Pilot Valve and Regulator Unit

All numbers in brackets refer to the item numbers on Figure 5.4.4.

5.4.4.1 Removing the Pilot Light Regulator from the Burner

There are two holes (1) in the handle (2) facing into the machined block. At the bottom of these holes there are two socket head screws visible. Undo and remove these screws using a 3 mm allen key (hexagon wrench). Rotate the pilot light handle (2) through 90° and two more screws will be visible. Undo and remove these screws as well. Grasp the pilot light handle and gently remove the complete regulator assembly from the burner block. Care should be taken because there is a fuel filter situated at the end of the regulator. This is not retained in position and may be lost when the regulator assembly is removed. Transfer the complete regulator assembly into a clean environment.

5.4.4.2 Servicing the Pilot Light Valve

If difficulties are experienced with the pilot light valve not functioning properly, then proceed as follows:

Ensure valve handle is in the ON position. Unscrew the spring retaining screw (3) using a $^{3}/_{8}$" wrench. Take care when removing this screw because there are some small spring loaded components retained by it. Remove the spring guide (4), spring (5) and the sealing ball (6) from the housing. If the regulator is inverted, the piston pin will also fall out. This item is very small and easily lost, so take care. Insert the spring (5) back over the spring guide (4) and try to compress the spring to ensure that it is not binding. Carefully inspect the sealing ball (6) for signs of any scratches or embedded material. If any material is present, carefully remove it. The sealing ball should be washed with soapy water if necessary, and allowed to dry naturally.

The valve seat (7), upon which the sealing ball seals, should be inspected for any evidence of scratches or marks. Inspection is simplified by shining a light into the bore. If any scratches are present, the complete regulator body (8) must be replaced.

Re-assembly is achieved by inserting the piston pin, dropping the sealing ball into the housing and placing the spring guide (4) and spring (5) on top of it. Insert the end of the spring guide (4) into the hole in the spring retaining screw (3) and tighten. This thread should not be locked with any type of thread locking compound.

Turning the valve handle off and on can then test the basic function of the valve. By watching the end of the spring guide (4) where it protrudes out of the spring retaining screw (3), the valve operation is functioning correctly if the spring guide moves up and down.

Before replacing the regulator assembly into the burner block, the fuel filter should be cleaned. It should be cleaned in Trichloroethane, MEK or kerosene and dried off before replacing it into the block.

5.4.4.3 Replacing the Pilot Regulator

Lightly grease the two "O" ring seals on the outside of the regulator body with silicon grease. Carefully insert the regulator assembly into the burner block. Rotate the assembly so that all four holes in the regulator body line up with the holes in the burner block. The hole pattern is asymmetric, so there is only one correct orientation. Carefully insert the four retaining screws and tighten. Use the allen key to install these screws in a crisscross pattern being careful to prevent over-tightening.

5.4.4.4 Testing the Pilot Valve for Correct Operation

Connect a fuel supply to the burner and turn on. Turn on the pilot light valve and light the pilot light. Check the pilot flame for stability and strength by trying to blow it out. This should be difficult to achieve.

Turn the pilot valve off and watch the pilot light flame. It should extinguish itself within five seconds as a maximum. If the flame does not go out, the sealing ball and/or the regulator body must be replaced.

5.4.4.5 Servicing Regulator Unit

Remove the regulator, as described in Section 5.4.4.1, and place in a clean environment.

Unscrew and remove the three-socket head screw (21), which are located around the circumference of the pilot valve handle. Remove the circlip (9) situated on the center shaft in the center of the handle. This should only be achieved by using circlip pliers. Care should be used to ensure that this circlip is not over-stretched during the removal process. If the circlip is twisted at all, it must be replaced. Gently ease the handle (2) off the regulator assembly. Remove the handle spring (11) and the washer (10), which is revealed, and store safely.

Using a peg wrench or similar tool, insert the pegs into the two holes of the spring retainer (12) and unscrew. Remove the main regulator spring (13). Gently pull the shaft of the piston (14) to remove the piston assembly from the regulator body (8). Take care not to damage the teflon piston seal (15), which is situated on the piston, while withdrawing the piston (14) over the threaded portion of the regulator body (8). If the piston pin (16) in the end of the piston assembly has not already been removed, it now should be, and stored.

Be careful to avoid putting the piston assembly down on a surface because it will naturally sit on the edge of the piston seal (15), which may be damaged as a result.

Unscrew the three screws (17) on the end of the piston and remove.

Remove the piston cap (18) to reveal the Piston seal (15). Note the orientation of the piston seal (15). The spiral spring must face towards the piston cap (18). Inspect the outer edge of the seal for any scratches or marks that may cause a leak. If in any doubt, replace with a new seal.

Also inspect the bore of the main regulator body (8) for any scratches or marks. If any are detected, the complete body must be replaced.

Before replacing the piston seal (15), lightly grease the barrel of the piston (14) over which the piston seal is fitted. Gently push the piston seal onto the piston until it is against the shoulder. Ensure that the seal is facing in the correct direction. Re-fit the piston cap (18) over the piston. If a Lindstrand regulator seal kit is used, then three new cap screws (17) are provided. If this kit is not available, the existing cap screw threads must be carefully cleaned, to remove all of the sealant. Prior to installation, the screw threads must be coated with a small quantity of thread sealant, a medium strength thread locker, such as Loctite blue is preferred. Screw the three screws (17) until tight against the piston cap (18), then put the piston pin (16) into the hole in the middle of the piston cap.

Lightly grease the bore of the regulator body (8) and insert the piston assembly, again taking care not to damage the piston seal on the threaded portion. Place the main regulator spring (13) over the shaft on the rear of the piston.

Place the spring retainer (12) over this shaft and press down to over-compress the main spring. Note that the recessed side of the spring retainer (12) must be facing outwards. Screw the spring retainer (12) into the regulator body (8) using the peg wrench, until it will not go any further. Be careful to ensure that the thread is correctly engaged.

Spread a little grease on the washer (10). Place the washer into the center recess on the inside of the pilot valve handle (2). On the outside of the regulator body, there are three machined sloping tracks. One of these tracks has its' innermost end located on a recessed groove. During re-assembly, this point must be aligned with the engraved "1" on the outer surface of the pilot valve handle.

Screw two of the three-handle retaining screws (21) into the regulator main body (8) through the pilot valve handle (2). Leave one screw out to allow the handle to be aligned correctly. The handle retaining crews have a plain portion at the end of the thread and should not be confused with the regulator retaining screws, which are similar. Place the handle spring (11) over the piston shaft (14) so that it sits upon the recessed hole in the spring retainer.

Install the pilot valve handle (2) and locate the other end of the spring against the washer located in the handle. Align the marks on the regulator body (8) and the pilot valve handle (2), as described, and compress the spring (11). Look through the hole of the omitted handle retaining screw and move the handle so that the hole is positioned above the recessed track in the regulator body. Screw both of the other handle retaining screws until they are tight, while keeping the handle steady. Insert and tighten the remaining handle retaining screw (21). Replace the circlip (9) on the end of the piston shaft (14).

Lightly lubricate the two "O" Ring, the larger "O" ring (19), is positioned next to the shoulder on the outside of the main regulator body. Another, slightly smaller "O" ring (20) is positioned at the bottom of the regulator cavity in the main burner block. Replace the regulator unit into the burner by following the instructions in Section 5.4.4.3.

5.4.5 Servicing of the Cross Over Valve

This is the valve, which is situated between the two halves of the burner on Double, Triple, Quad models.
Reference Figure 5.4.5
Malfunctions of this valve will be observed in one of the following ways:

a. Propane leak through the stem of the valve or around the handle area.

b. Propane leaking from one or two of the valve side faces.

c. Propane appearing at the jets of the second burner with the cross over valve closed and the main blast valve open on the first burner.

Stem leaks can often be eliminated by adjustment, but the other two type of leak (b and c) are usually corrected by installing a new sealing kit.

All numbers in brackets refer to the item numbers on Figures 5.4.5.1 and 5.4.5.2.

5.4.5.1 Correcting Stem Leaks

While holding the valve handle (1) steady, unscrew the self-locking nut (2) in the center of the handle using a $^{9}/_{16}$" socket, and remove. Remove the handle (1) and the locking clip (3) from the valve stem (4). While holding the stem still by placing a wrench on the two flats on the shaft, tighten the lower plain nut by ½ a turn.

Replace the handle (1) and nut (2) and test fire the burner to ensure that there is no further leakage. If leakage is still detected, then repeat the above process and tighten the plain nut by another half turn.

5.4.5.2 Replacing Valve Seals

Turn the valve into the "on" position. Loosen, but do not remove the eight screws, which attach the cross mounting bracket to the burner cans. Unscrew and remove the four cap head screws, which clamp the two halves of the burner together. Take care when removing the last screw that the complete valve body (5) does not fall out. Remove the valve body (5) by withdrawing the valve downward from between the two burner halves.

It is essential to perform any service work on the valve in a clean environment. Tip the two ball seals (6) out of the valve. Lift the body connector seals (7) away from the valve body, being careful not to mark or scratch the body. Turn the valve handle (1) to the off position to allow the ball (8) to be removed out of the side of the valve.

Remove the valve handle (1), as described above. Remove the locking clip (3) and unscrew and remove the plain gland nut (9). Turn the valve stem so that the two flats on the stem are aligned with the two longest sides of the valve. Gently push the stem (4) into the valve body (5) and remove the stem (4) through the side. Take great care not to scratch the body of the valve itself, while removing the valve stem. Remove the two disc springs (10), the spacer (11) and the three gland seals (12) from the outer recessed position around the valve stem. Remove the single gland seal (13) on the inside of the valve. This seal (13) is normally retained on the valve stem (4), so it may have been removed already.

Discard all the old components for which replacements are provided in the seal repair kit (3, 6, 7, 9, 10, 12 and 13).

Clean and inspect the valve body (5) and valve ball (8) for any marks or scratches. If any scratches are detected, the items concerned must be replaced. Remove the four new gland seals from the seal kit. These four seals are identical and therefore interchangeable. Apply a small amount of grease over each of the seals. Install one seal over the threaded end of the valve stem. Carefully re-insert the threaded end of the valve stem (4) through the valve body (5), in the same way as it was removed. Install the remaining three gland seals (12) onto the valve stem (4), along with the spacer ring (11), two disc springs (10) and the plain gland nut (9).

A wrench should be used on the two valve stem (4) flats to hold it steady. Tighten the plain gland nut (9) to a torque of 3.5 lbs ft (4.75 Nm). Install the locking clip (3) over the plain gland nut. Rotate the valve stem several times and re-adjust the plain gland nut as necessary. Note that over-tightening the plain gland nut (9) causes an unduly stiff action to the valve and reduces the life of the valve stem seals (12 and 13). Turn the valve into the closed position and slide the ball (8) onto the end of the valve stem (4). Open the valve to retain the ball in position. The new ball seals (6) and body connector seals (7) may now be fitted. Apply silicone grease to each of the seals prior to installation. The grease helps to hold the ball seals in position during reassembly of the valve. Clean the two end faces of the burner blocks, which seat onto the cross over valve assembly. Insert the valve into position and tighten the four valve retaining cap head screws in a diagonal pattern to a torque of 9 lbs ft (12.2 Nm). Re-install the valve handle (1) and tighten the self-locking nut (2) to retain the handle.

Re-tighten the eight screws, which hold the cross bracket to the burner cans, and test fire.

5.4.6 Servicing of the Pressure Gauge

One pressure gauge is provided for each separate supply system in the burner. Pressure gauge malfunctions are most commonly caused by a lack of, or insufficient venting of propane, prior to shutting the burner down. In this situation, liquid can become trapped within the burner and as it warms up it will expand. This expansion is normally achieved in the pressure gauge. Eventually, the pressure gauge is extended beyond its operating range and the bordon pressure tube is permanently deformed. When this occurs it will result in the pressure gauge not returning to zero when there is no pressure in the burner (a non-zero error). The pressure gauge must be replaced to rectify this fault. All numbers in brackets refer to the item numbers on Figure 5.4.6.

5.4.6.1 Replacing the Pressure Gauge

Carefully place the long end of a 1/8" (3 mm) allen key (hexagon wrench) across the face of the pressure gauge and engage it in the two slots on the bezel ring (1). Undo the bezel ring (1) and remove. Insert two bent pieces of stiff wire down opposite sides of the gauge (2) and carefully pull the gauge away from the block.

Re-fitting is the reverse process of dismantling the pressure gauge. Lubricate the two "O" ring seals (3 & 4) on the back of the pressure gauge before installation. Also ensure that the alignment peg (5) in the burner block is fitted through the drilled hole in the back face of the pressure gauge body. Take care to ensure that the threads on the bezel ring (1) are correctly engaged before applying a tightening force. It should be noted that if these threads are damaged, the complete burner block must be replaced.

5.4.7 Replacing the Igniter Assembly

The numbers in brackets refer to the item number on Figure 5.4.3.

Unscrew the retaining socket head allen set screw (2), using a 3 mm allen key. This retaining allen set screw is situated on the outer facing side of the main block in line with the igniter. It is not necessary to completely remove this allen set screw, just loosen it sufficiently so that the complete igniter assembly may be withdrawn by carefully pushing on the igniter body, inside the burner can.

Upon re-assembly, ensure that the "O" ring situated on the outer body of the new igniter assembly has been lubricated with a small amount of silicon grease.

Insert the new igniter and push it into the burner block until the lower surface aligns with the burner block. Check that the gap between the electrode and the plate attached to the pilot light cup is approximately 4 mm.

Tighten the allen set screw to retain the igniter in position, being careful to not over tighten which could damage the igniter body.

Operate the igniter to ensure there is a spark between the electrode and pilot light cup.

5.4.8 Adjustment of the Slurper Tube JetStream Burners

The slurper tube is located within the burner can. It works by the passage of fast flowing propane vapor across the upper end, causing suction in the tube itself. This in turn draws any water present within the burner can up the tube to be ejected into the burner flame. It is therefore important that the upper end of the slurper tube is precisely located within the flow of propane from the main jets. The numbers in brackets refer to item numbers ballooned on Figure 5.4.8.

The slurper tube is located in position on one of the locating screws at the base of the burner can. For adjustment, loosen this screw (1) and rotate the slurper tube (2) into the position shown in Figure 5.4.8. Tighten the screw (1) and again check the positioning of the top of the tube. If it has moved due to the tightening of the screw, then the tube should be fine-tuned by gently bending the top of the tube until it rests in the correct position.

5.4.9 Bleeding of the Hydraulic Remote Burner Control

The following instructions assume that the equipment supplied in an optional service kit is available.

The number in brackets refers to the ballooned item numbers in Figure 5.4.9.

Connect the quick release coupling so that the hand held lever assembly and blast valve are connected. Turn adjuster (1) anti-clockwise as far as it will go. Slacken adjuster (2) until the lever is at the extent of its travel. Remove screw (3) and the washer.

Fill the syringe with oil and attach short tube to the end. Fit the small bleed adaptor to the hole (3). Fit syringe and tube to the small bleed adaptor.

On the blast valve bonnet, remove screw (4) and screw in the other bleed adaptor with washer. Attach long tube to bleed adaptor and place the other end in a suitable container.

Pump the oil from the syringe through the system in one slow continuous movement. Once the oil begins to drain from the blast valve, keep pumping until no more bubbles appear in the tube.

Remove the long tube and bleed adaptor and replace screw and washer. Remove syringe, tube and bleed adaptor from the lever assembly and replace screw and washer. Clean off all excess oil and adjust screws (1) and (2) so that the lever assembly can be operated comfortably and to remove any slack from the system.

APPENDIX 5 – BALLOON INSPECTION (''Section 6'')

SECTION 6
BALLOON INSPECTION

6.1 100 Hour/Annual Inspection

This inspection is to be carried out annually to meet the annual inspection requirements of FAR 91.409(a)(1). For balloons used in commercial operations, this inspection must be carried out each 100 hours of operation, as described in FAR 91.409(b). There is no difference in the parts inspected during an annual or a 100-hour inspection. Completion of an annual or 100 hour inspection must be completed by an appropriately rated repair station or an appropriately rated person.

6.1.1 Applicability

The Maintenance Schedule applies to all Lindstrand Balloons certificated in any category.

6.1.2 Qualification

Inspection must be carried out by a properly certified and rated repairman under authority of an FAA certified Repair Station rated for Lindstrand Balloons, or may be done by qualified Airframe and Powerplant Mechanics who hold an Inspection Authorization (IA) rating, and who are qualified to inspect balloons.

6.1.3 Documentation

The aircraft logbook must be present for all annual inspections. All maintenance, preventative maintenance and any alterations must be properly recorded in the aircraft logbook. The entries identifying components of the balloon should be checked and verified to ensure agreement with the components actually installed in the balloon presented for inspection.

On successful completion of the inspection, the return to service must be documented with the following or similar entry: "I have inspected this aircraft using procedures approved by the manufacturer for the completion of a (Annual/100 hour) inspection, and find the aircraft is in an airworthy condition. This aircraft is approved for return to service in accordance with a (Annual/100 hour) inspection". The entry must include the aircraft total time, the date of the inspection, the maximum temperature indicated on the temperature label, any airworthiness directives that have been complied with during the inspection and any repairs, installations or replacements made, along with the name, certificate type and certificate number of the person making the entry, as well as the work order number which provides traceability to the pertinent inspection documents on file.

If the aircraft is found to be in an unairworthy condition, the inspector must make note of the discrepancies in the aircraft logbook, and make a statement in the logbook of the unairworthy conditions.

6.1.4 Envelope

It is recommended that inspection of the envelope be achieved by a gore-by-gore fabric inspection. Inspect the following:

a) The optional Temperature Link (Temp Flag) may be installed in the balloon crown. Temperature warning flag is in addition to the required temperature instrument (Pyrometer) and the required temperature labels. Tempil labels may not be removed by operators and should only be removed by repair personnel if being replaced per Sect. B.

b) Check the temperature label for overheating. If the tempil label indicates 275ºF or higher, then a new label should be fitted and the maximum temperature reached noted in the logbook. The overheated label should be removed and kept with the records of the inspection.

c) Check the fabric for holes or tears. Small holes in the nomex are acceptable, but any damage above this level must be repaired in the approved manner.

d) If excessive porosity is suspected, check the fabric for porosity by trying to blow through it. If the porosity of the fabric is high, a flight test should be considered, by the inspector, to assess the controllability.

e) The fabric at the edge of the parachute should be checked for heat damage. If the fabric is weak or obviously discolored, this can indicate that the parachute is not sealing correctly. The parachute should be repaired/replaced and inspected to ensure that the parachute is correctly adjusted.

f) Check all load tapes for security of stitching, especially around the crown ring and where the overlying tapes join the top rim tape.

g) Check the load tape loops that connect the envelope cables to the envelope. There should be no burn damage to the load tape or fraying.

6.1.4.1 Parachute

a) Check the parachute deflation line for fraying. If the kevlar core is visible through the outer coating, this may necessitate complete line replacement. Check that the termination knot is secure.

b) Check that the parachute pulley is running freely and that there is no wear. Check that there are no threads wrapped around the pulley. Lubricate with silicone spray.

c) Check that the retaining and pulldown cords are in good condition. Stiffness of the cords indicates overheating.

d) Check the knots and loop stitching to the envelope and parachute.

e) If there is any doubt about the sealing of the parachute, it should be checked by conducting a hot inflation. The overlap should be equal around the circumference and there should be no daylight visible. There should not be excessive tension in any of the retaining lines, or radial stress wrinkles at the parachute edge.

6.1.4.2 Q-Vent

a) Check the parachute (Candy Stripe) and Q-Vent (Red) deflation lines for fraying. If the kevlar core is visible through the outer coating, this may necessitate complete line replacement. Check that the termination knot is secure.

b) Check that the parachute and Q-Vent deflation line pulleys are running freely and that there is no wear. Check that there are no threads or debris wrapped around the pulleys. Lubricate with silicone spray.

c) Check that the combination centering/pull down cords are in good condition. Discoloration of the cords indicates overheating. In balloons flown in dusty conditions, the cords may collect dirt causing an increased effort to operate the Q-Vent. It is recommended that in this case the condition of the cords be evaluated for replacement. Additionally, the condition of the pulleys or rings throughout the Q-vent rigging should also be evaluated for replacement.

d) Check the combination centering/pull down cord rings or pulleys at the cap edge for wear. Lubricate pulleys with silicone spray. Check for abrasion at attachment loop.

e) Check the knots and loop stitching to the envelope and parachute.

f) In earlier versions of the Q-Vent, verify presence and condition of line stoppers when pulleys are at end of kevlar centering lines

g) If there is any doubt about the sealing of the parachute, it should be checked by conducting a hot inflation. The overlap should be equal around the circumference and there should be no daylight visible. There should not be excessive tension in any of the retaining lines, or radial stress wrinkles at the parachute edge.

6.1.4.3 SuperChute

If the balloon is equipped with a SuperChute, contact Lindstrand USA for inspection and repair procedures.

6.1.4.4 Velcro Rip Panels

Check the operating line for fraying and security of attachment.

Check that the rip locks operate correctly.

Check the condition of the velcro. It should be clean and have good adhesion.

The fit of the velcro should be checked. The velcro on the rip panel itself must not be shorter than the velcro on the balloon.

The overlying tapes of the velcro rip panel must be up to 5% shorter than the corresponding panel seam length. If this is not the case, it should be reported to Lindstrand Balloons.

6.1.4.5 Load Bearing Attachments

Envelope Cables

All suspension wires on Lindstrand Balloons are manufactured from either stainless steel or Kevlar/Technora. Replacement with galvanized mild steel is not acceptable.

For stainless steel envelope cables, check that there are no broken wires or severe kinks. Slight discoloration due to burning is permissible, provided that the flexibility is not reduced. Excessive localized flexibility should not be present as this indicates severe overheating. Cable must spring back to original shape after bending.

Check the thimbles and ferrules for distortion. Check that the quick link is tight and in good condition.

For non-metallic envelope cables, inspect for any signs of heat damage to the outer sheath and for any damage to the outer sheath which reveals the inner core. If the core (Kevlar/Technora) is visible, then the cable must be replaced. The braided cover may not be repaired with tape or heat shrink tubing. Inspect integrity of splice and thimble ends. Replacement non-metallic flying wires may only be obtained from the Lindstrand factory. Replacement of flying wires should be carried out in accordance with Section 5.1.2.4.

Carabiners

Carabiners should be free of distortion and the screw gate should operate freely.

Basket Wires

These should be checked for damage and that the thimble and ferrule are intact. A slight distortion of the thimble is not critical, provided that the wire is not frayed beyond the specified limits.

Load Frame

Check for distortion of the load frame and all the welds.

Check the security of the burner attachment to the inner frame and the inner frame into the outer. The pivot of the burner should be slightly stiff, but not to the extent that movement is prevented.

On a center-gimbal burner, check tightness of center block bolts and tension adjusting bolts.

Ensure that the nylon rods are free from fractures and the steel stubs on basket and burner frame are intact.

6.1.4.6 Burner

Inspect all fuel connectors, pressure gauge, pilot, main and liquid controls. Clean and lubricate per annual / 100 hour inspection checklist.

All fuel hoses, main burner and manifold, must be replaced after 10 years **in service**.

Check condition of fuel hoses, including any manifolds that are fitted and perform functional burner test.

WARNING!
ONLY APPROVED LINDSTRAND FUEL HOSES MAY BE USED! INSTALLATION OF ANY OTHER HOSES OR MANIFOLDS IS DANGEROUS AND IS SPECIFICALLY NOT APPROVED. IF UNAPPROVED HOSES ARE FOUND CONNECTED TO THE AIRCRAFT FUEL SYSTEM, THEY MUST BE REPLACED WITH APPROVED PARTS.

6.1.4.7 Fuel Cylinders

Check for external damage to the pressure vessel. Damage to the protective top and bottom rings is not critical, provided there is no damage to cylinder body at points where these rings are attached.

Check the operation of the contents gauge.

Check that when no hoses are connected, the self-sealing function of the liquid connectors is leak-tight by opening the valve. After testing, release the pressure.

An internal inspection of cylinders manufactured by Lindstrand Balloons is required after twelve years, and thereafter every five years. For convenience, cylinder tests may be carried out in advance of the annual inspection and the results noted in the logbook.

6.1.4.8 Baskets

Inspect the interior and exterior of the basket for any damage to the wicker. If more than 4 vertical strands of wicker out of 12 consecutive vertical strands are broken they must be repaired. If more than 12 horizontal strands in a 24 inch by 24 inch area are broken they must be repaired. If a hole in the wicker exists larger than 2.5 inches at the widest dimension, it must be repaired. In woven floor baskets, any broken primary rattan (approx. 3/4 inch) supports must be replaced.

On solid floor baskets check the condition of the plywood floor. Any cracks present must not be transmitted to the underside of the floor.

Damage to the runners is not critical, provided that they are not broken in two.

Check the condition of the rawhide and scuff leather. This is a protective layer so not critical to structural strength, but if it is damaged, should be repaired at earliest convenience.

6.1.4.9 Easy Access Baskets

Check the top bar operation and check the frame for any distortion which results in any difficulty in inserting the top bar release pin. Check the security of the door latches and for any distortion in the door frame hinges. Lubricate four hinge points with a light lubrication oil such as Tri-Flow.

6.2 Fabric Strength Test (See Figure 6.2)

If the total number of hours on the balloon envelope is greater than 150, or the time in service is over 3 years, at the time of annual inspection, fabric tests must be performed in the following areas:

At the parachute cap edge. One test warp and one test weft in each color to 20 pounds.

In the parachute between the velcro tabs and center patch. One test warp and one test weft in each color to 30 pounds.

At the top panel of the balloon. One test warp and one test weft in each color to 30 pounds.

At the panel behind each turning vent outer flap. One test warp and one test weft in each color to 30 pounds.

In balloons built with Hyperlife fabric, in the first ripstop or Diamond Weave panel below the Hyperlife. One test warp and one test weft to 30 pounds.

Special shape balloons, in the area of internal formers. One test warp and one test weft to 30 pounds.

X Series Internal Baffle **Grab Test is not required.**

6.3 Inspection After Overheating

If the maximum temperature indicated on the temperature tags is less than 275ºF, then no further action is required. If the indicated temperature of the temperature tags is 275ºF or greater, a fabric inspection is required. Pay particular attention to the edges of the parachute fabric and the parachute retaining lines. Excessive heat on fabric tends to cause cracking, due to stiffness. Discoloration is also another sign of overheating. If any signs are visible, then a fabric strength test should be conducted at various positions, both on the top panels and the parachute panels, as described in Section 6.2. If no signs of overheating are visible, and the fabric strength test indicates sufficient fabric strength, record the maximum temperature reached in the log book and install a new tempil label per 6.1.4 (b) and the inspection checklist.

6.4 Inspection After A Hard Landing

Should a hard landing be experienced where damage to the balloon is suspected, an inspection in accordance with the annual inspection guidelines in section 6 of this manual should be carried out. Any damage found that would prevent the balloon from passing a 100 hour / Annual inspection must be reported to Lindstrand Balloons to determine the appropriate action. The balloon must not be flown until it is capable of passing the 100 Hour / Annual inspection.

APPENDIX 6 – ILLUSTRATIONS

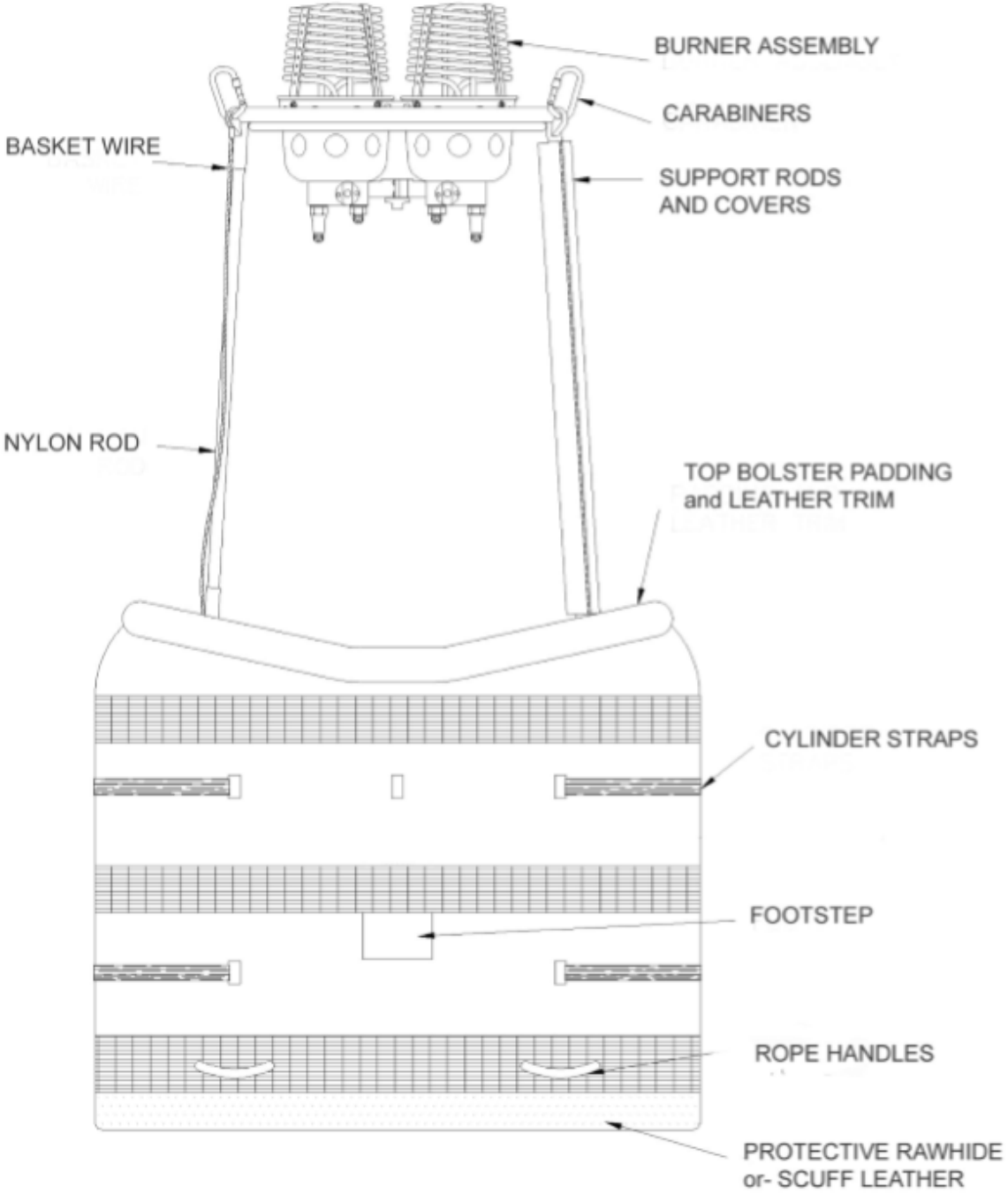

FIG 3.2.1 BASKET NOMENCLATURE

March 16, 2018 Issue 2.4 Appendix "C" 5 of 45

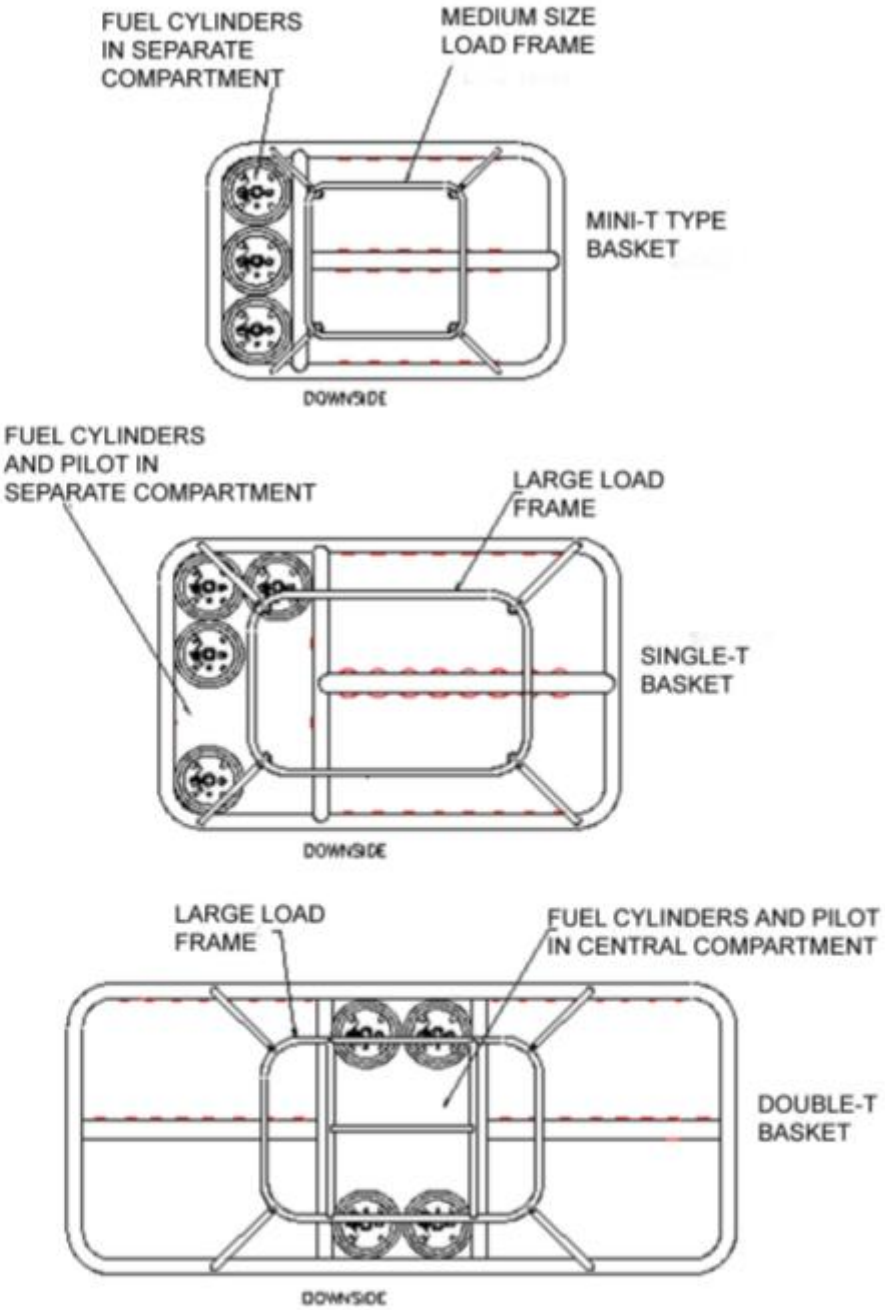

FIG 3.2.2 DIFFERENT BASKET LAYOUTS

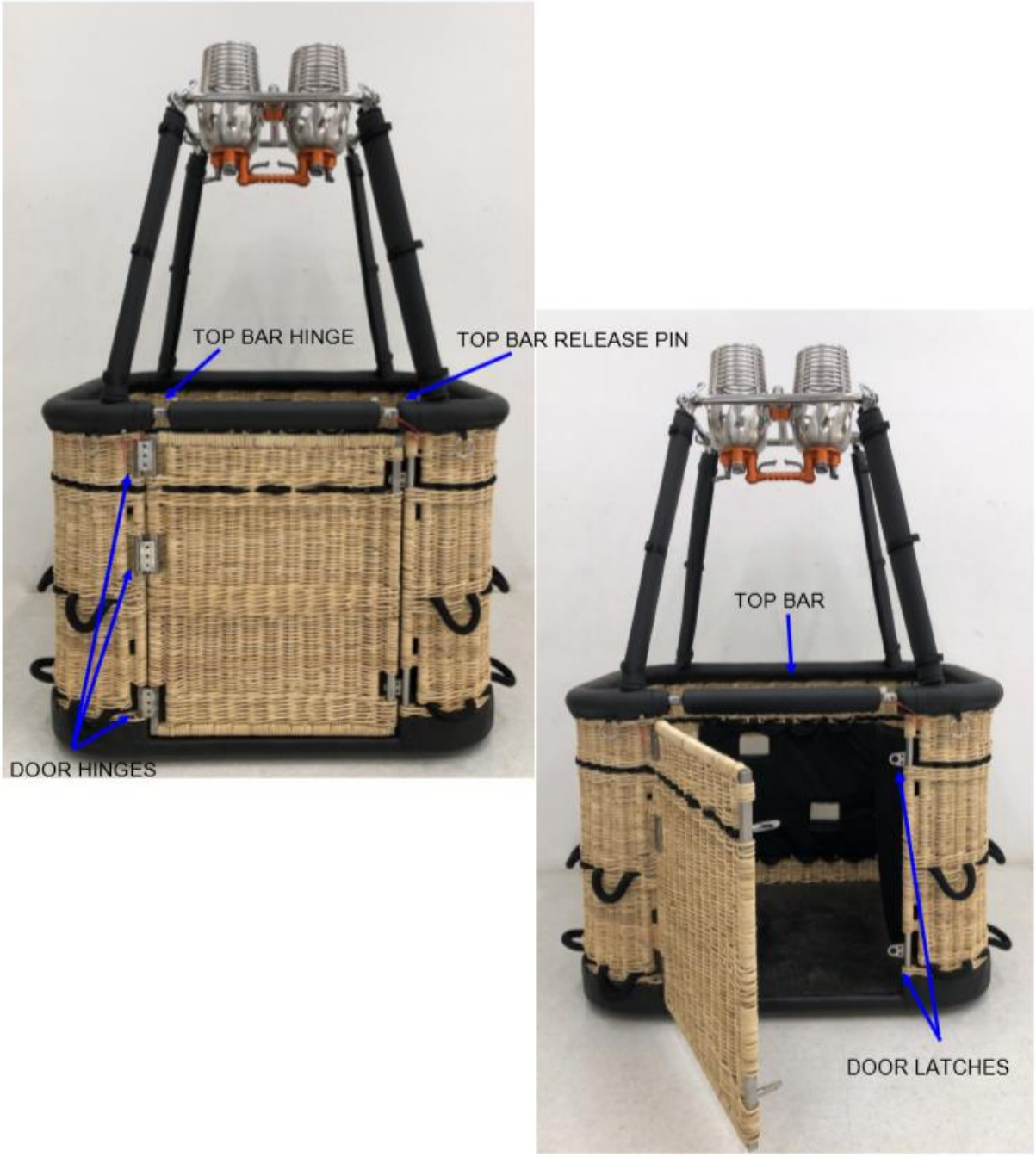

FIG 3.2.3 OVERVIEW EASY ACCESS BASKET

Top Bar raised with stopping pin installed

Top Bar in closed position with release pin installed

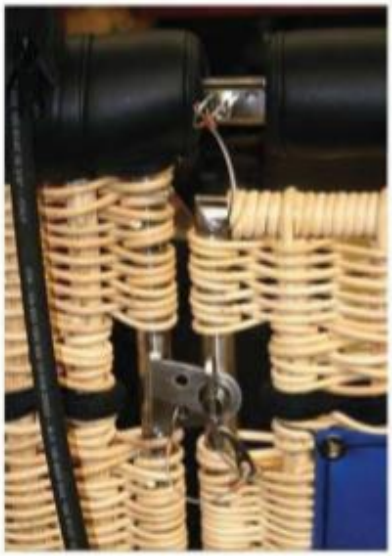

Top Bar release pin installed, upper door latch secured, and safety hook attached

FIG 3.2.4 EASY ACCESS BASKET DETAIL

March 16, 2018 Issue 2.4 Appendix "C" 8 of 45

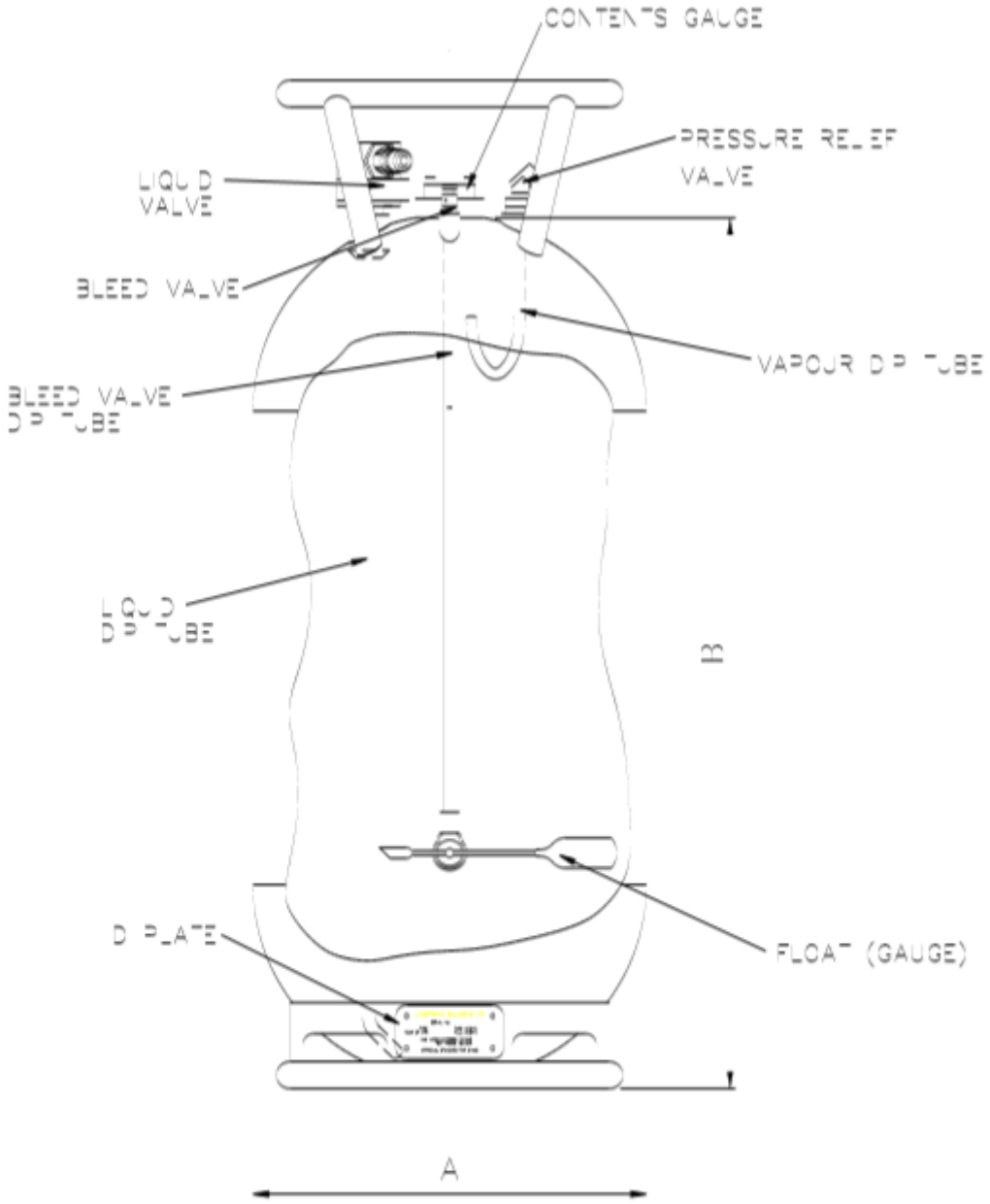

CYLINDER	HEIGHT (B)cm	DIAMETER (A)cm
V 20	74.5	31.2
V 30	83.7	36.5
V 40	100.7	36.5

FIG 3.3.1 FLIGHT CYLINDER

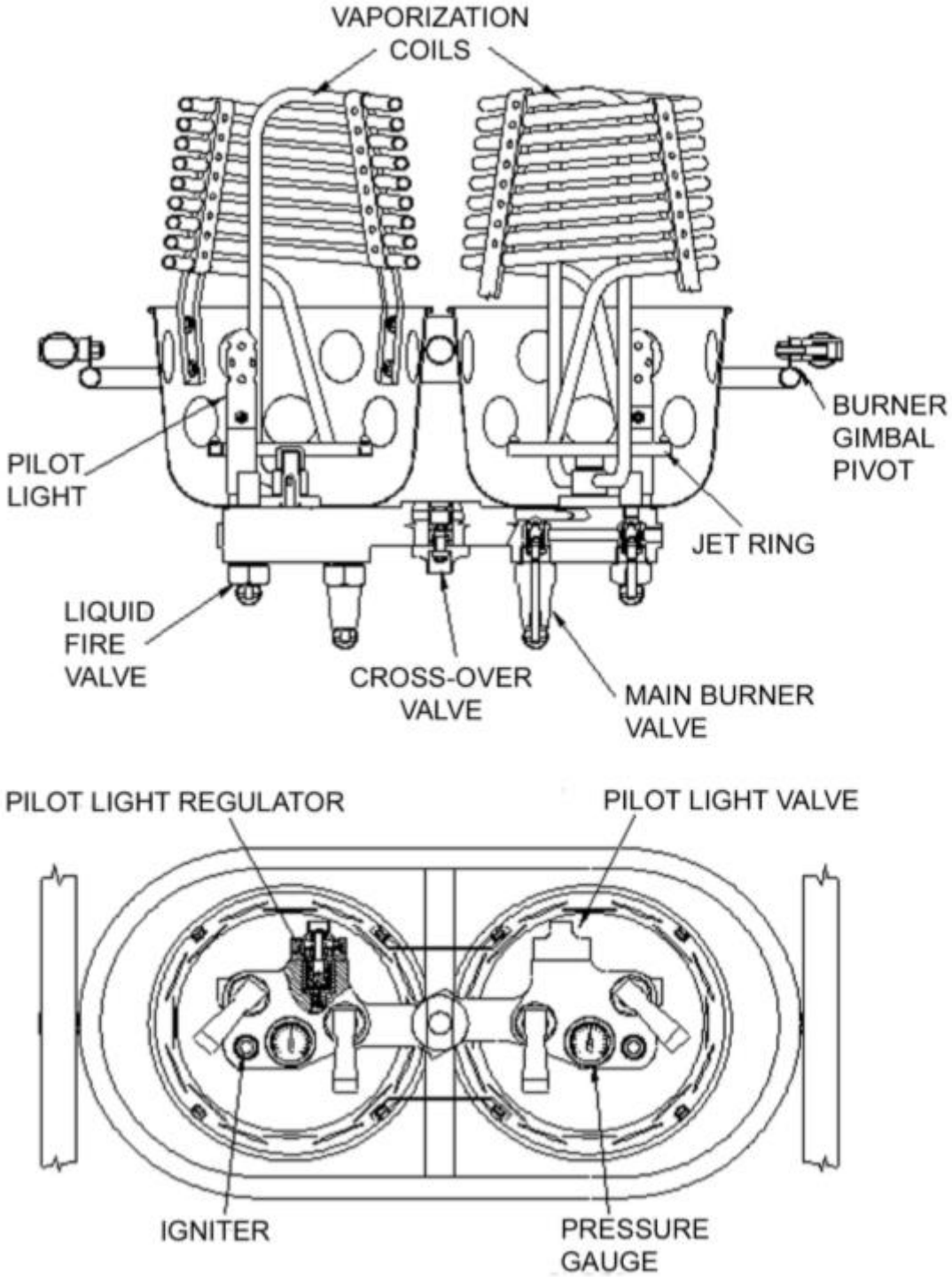

FIG 3.4.2 DOUBLE BURNER OVERVIEW (SERIES 1)

March 16, 2018 Issue 2.4 Appendix "C" 12 of 45

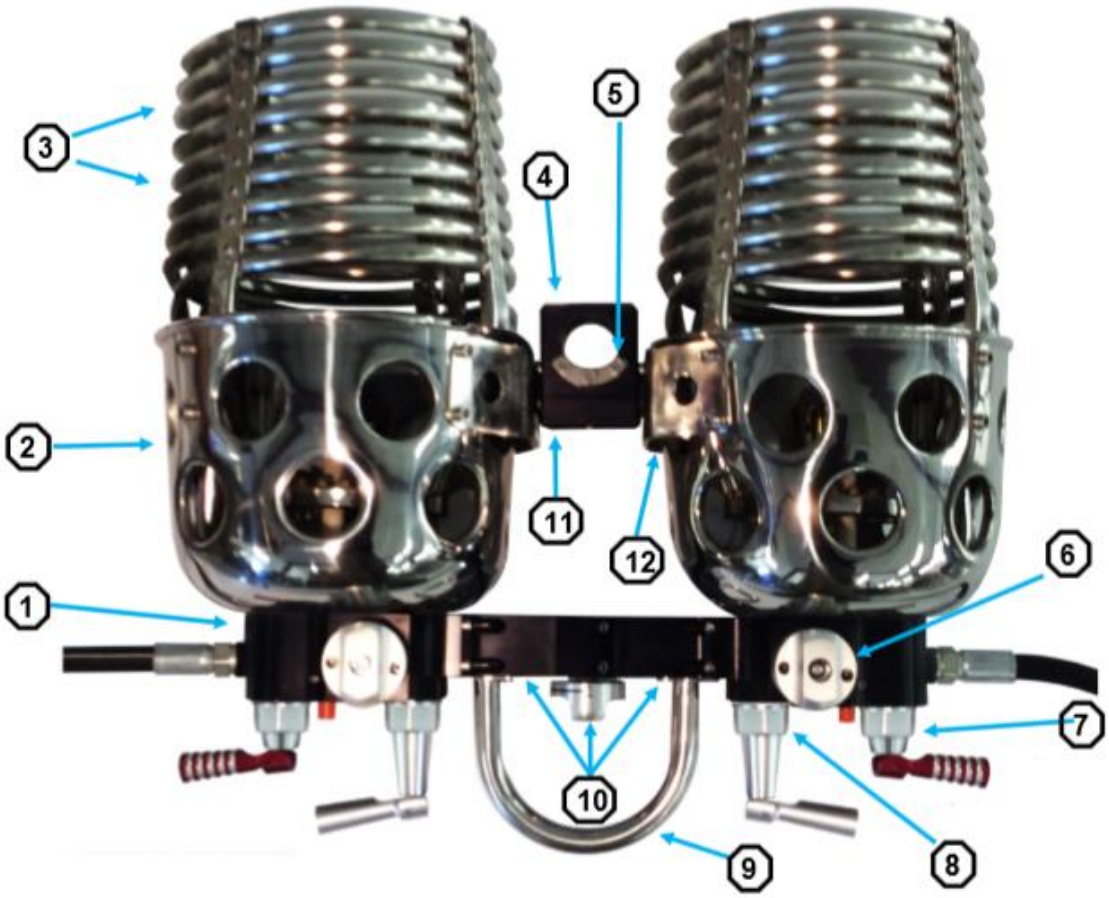

1 DOUBLE BLOCK ASSY.
2 BURNER CAN
3 COIL ASSY.
4 GIMBLE BLOCK CAP UPPER
5 GIMBLE BLOCK ASSY.
6 PILOT LIGHT VALVE
7 LIQUID FIRE VALVE
8 MAIN VALVE
9 HANDLE ASSY. (TOGGLE)
10 CROSSFLOW ASSY AND VALVE
11 GIMBLE BLOCK CAP LOWER
12 SWIVEL ASSY.

FIG 3.4.3 JETSTREAM SERIES 2 DOUBLE BURNER SIDE VIEW (TOGGLE)

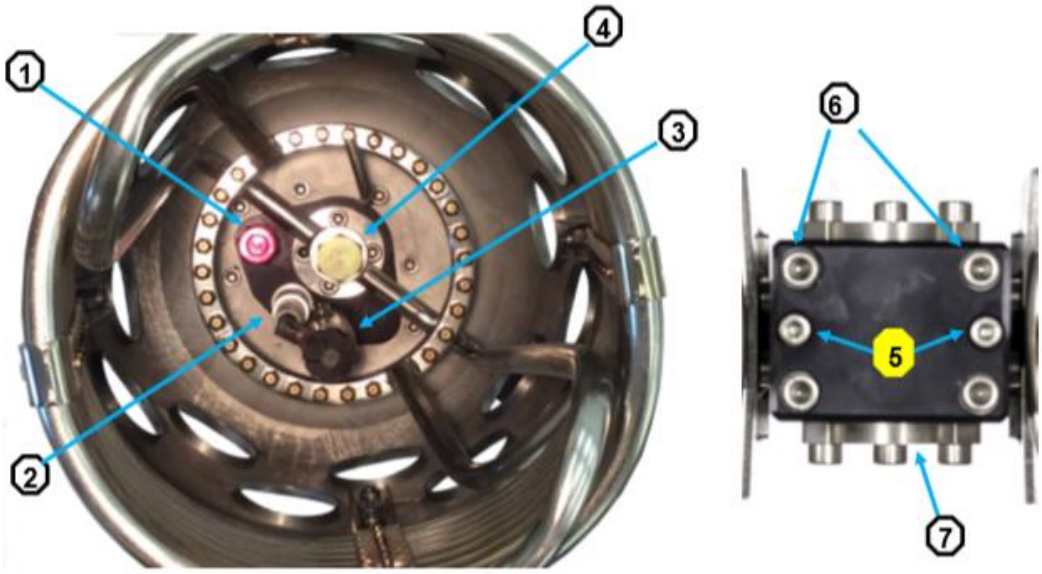

1 LIQUID FIRE JET ASSY.
2 IGNITER ASSY (TOP)
3 PILOT LIGHT ASSY.
4 COIL POST
5 GIMBLE TENSION SCREW
6 GIMBLE MOUNTING SCREW
7 GIMBLE BLOCK ASSY.

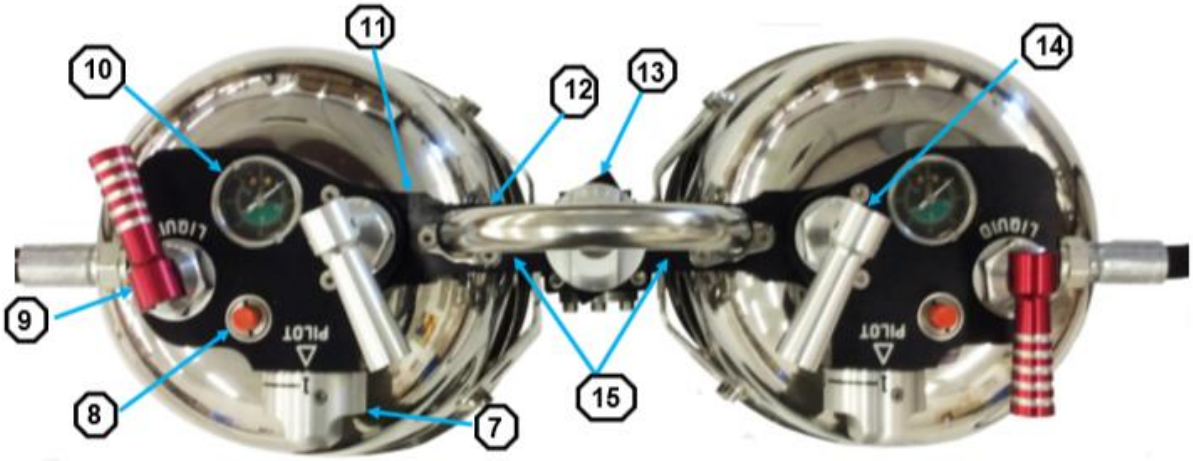

7 PILOT LIGHT VALVE ASSY.
8 IGNITER ASSY. (BOTTOM)
9 LIQUID FIRE VALVE ASSY
10 PRESSURE GAUGE ASSY.
11 COVER BLOCK
12 HANDLE ASSY. (TOGGLE)
13 CROSSFLOW VALVE
14 MAIN VALVE ASSY.
15 CROSSFLOW ASSY

FIG 3.4.3.1 JETSTREAM SERIES 2 DOUBLE BURNER TOP AND BOTTOM VIEW (TOGGLE)

March 16, 2018 Issue 2.4 Appendix "C" 14 of 45

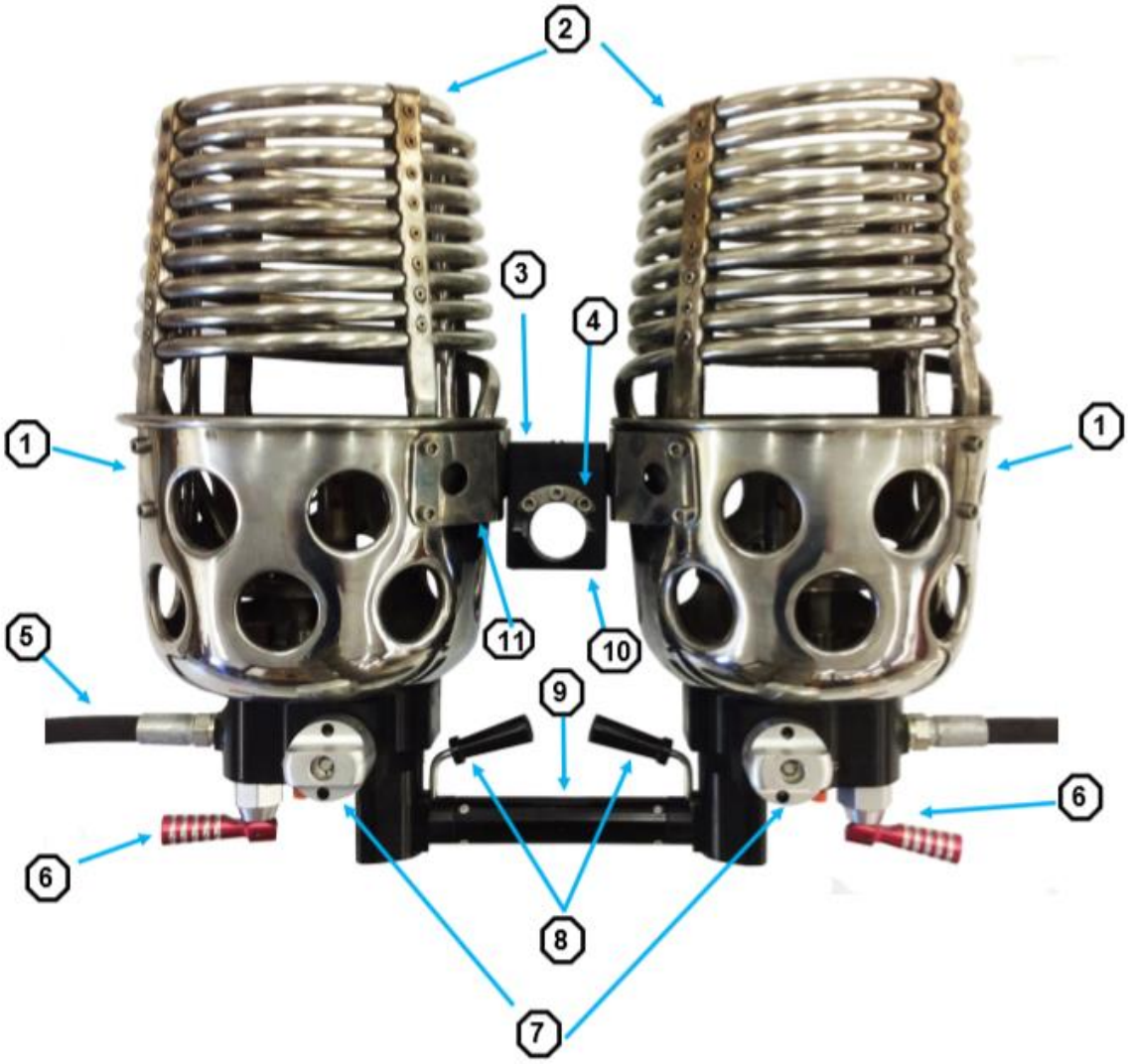

1 BURNER CAN
2 COIL ASSY.
3 GIMBLE BLOCK CAP UPPER
4 GIMBLE BLOCK ASSY.
5 FUEL HOSE
6 LIQUID FIRE VALVE
7 PILOT LIGHT VALVE
8 MAIN VALVE
9 HANDLE TUBE
10 GIMBLE BLOCK CAP LOWER
11 SWIVEL ASSY.

FIG 3.4.4 JETSTREAM SERIES 2 DOUBLE BURNER SIDE VIEW (SQUEEZE)

March 16, 2018 Issue 2.4 Appendix "C" 15 of 45

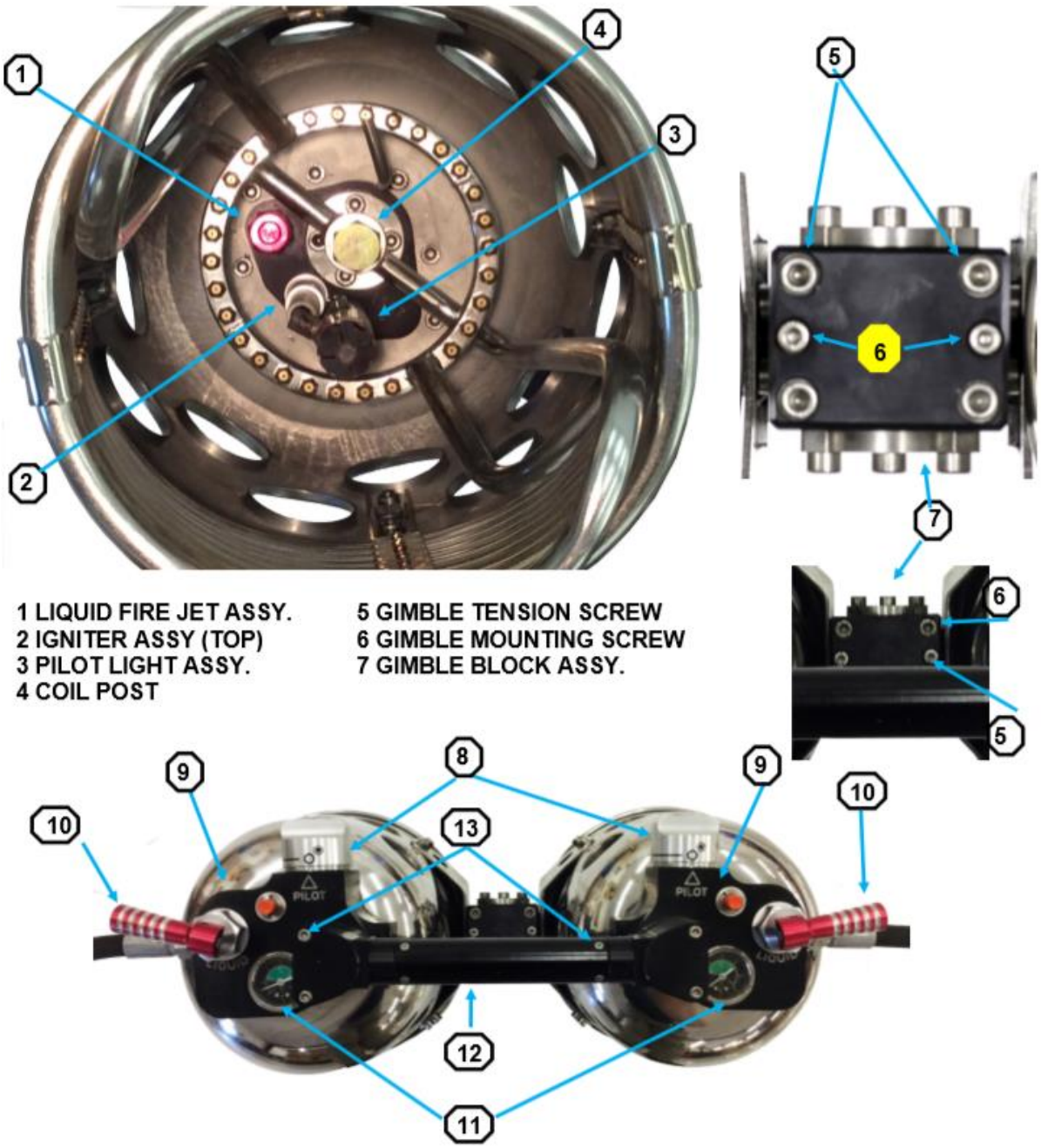

1 LIQUID FIRE JET ASSY.
2 IGNITER ASSY (TOP)
3 PILOT LIGHT ASSY.
4 COIL POST

5 GIMBLE TENSION SCREW
6 GIMBLE MOUNTING SCREW
7 GIMBLE BLOCK ASSY.

8 PILOT LIGHT VALVE ASSY.
9 IGNITER ASSY. (BOTTOM)
10 LIQUID FIRE TOGGLE HANDLE

11 PRESSURE GAUGE ASSY.
12 HANDLE TUBE
13 HANDLE MOUNTING AND DISASSEMBLY SCREWS

FIG 3.4.4.1 JETSTREAM SERIES 2 DOUBLE BURNER TOP AND BOTTOM VIEW (SQUEEZE)

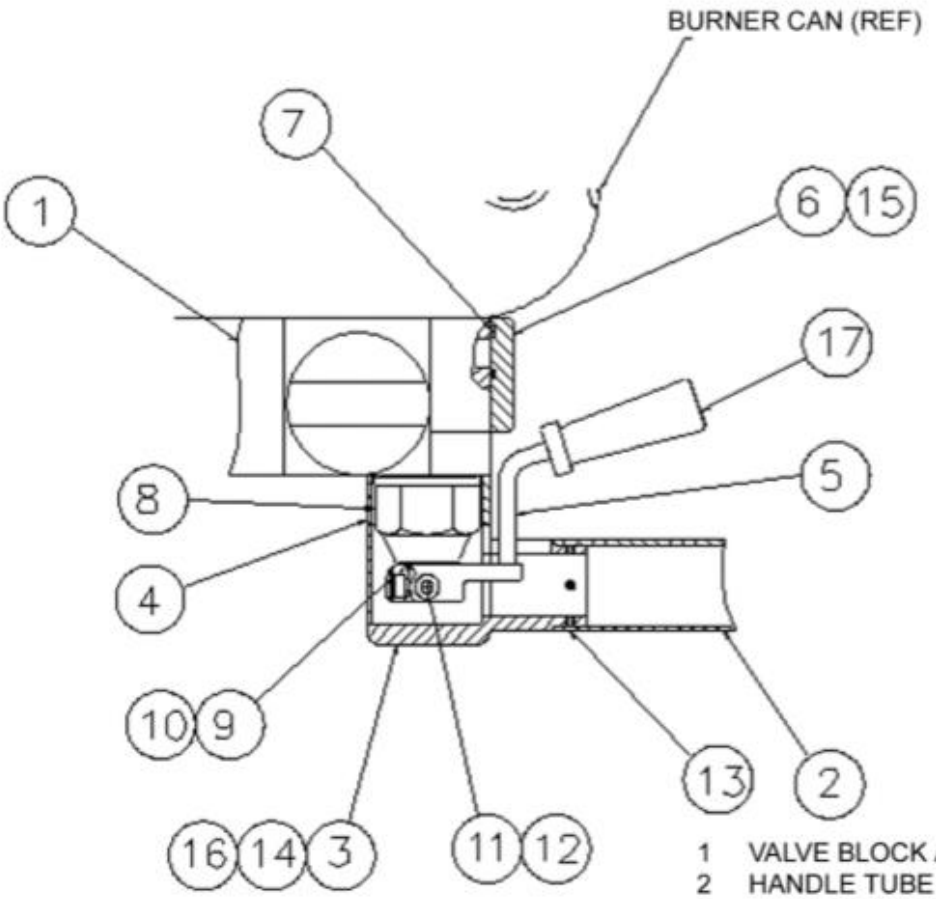

1 VALVE BLOCK ASSEMBLY
2 HANDLE TUBE
3 VALVE POST UPPER
4 VALVE POST LOWER
5 BLAST TRIGGER ASSEMBLY
6 BLANKING PLATE
7 O-RING
8 MAIN VALVE ASSEMBLY
9 SPRING CAP
10 SPRING
11 PIVOT PIN
12 CIRCLIP
13 COUNTERSINK SCREW
14 M5 CAP HEAD SCREW
15 M6 CAP HEAD SCREW
16 CRINKLE WASHER
17 TRIGGER GRIP

FIG 3.4.4.2 MAIN SQUEEZE ACTION VALVE DETAILS JETSTREAM

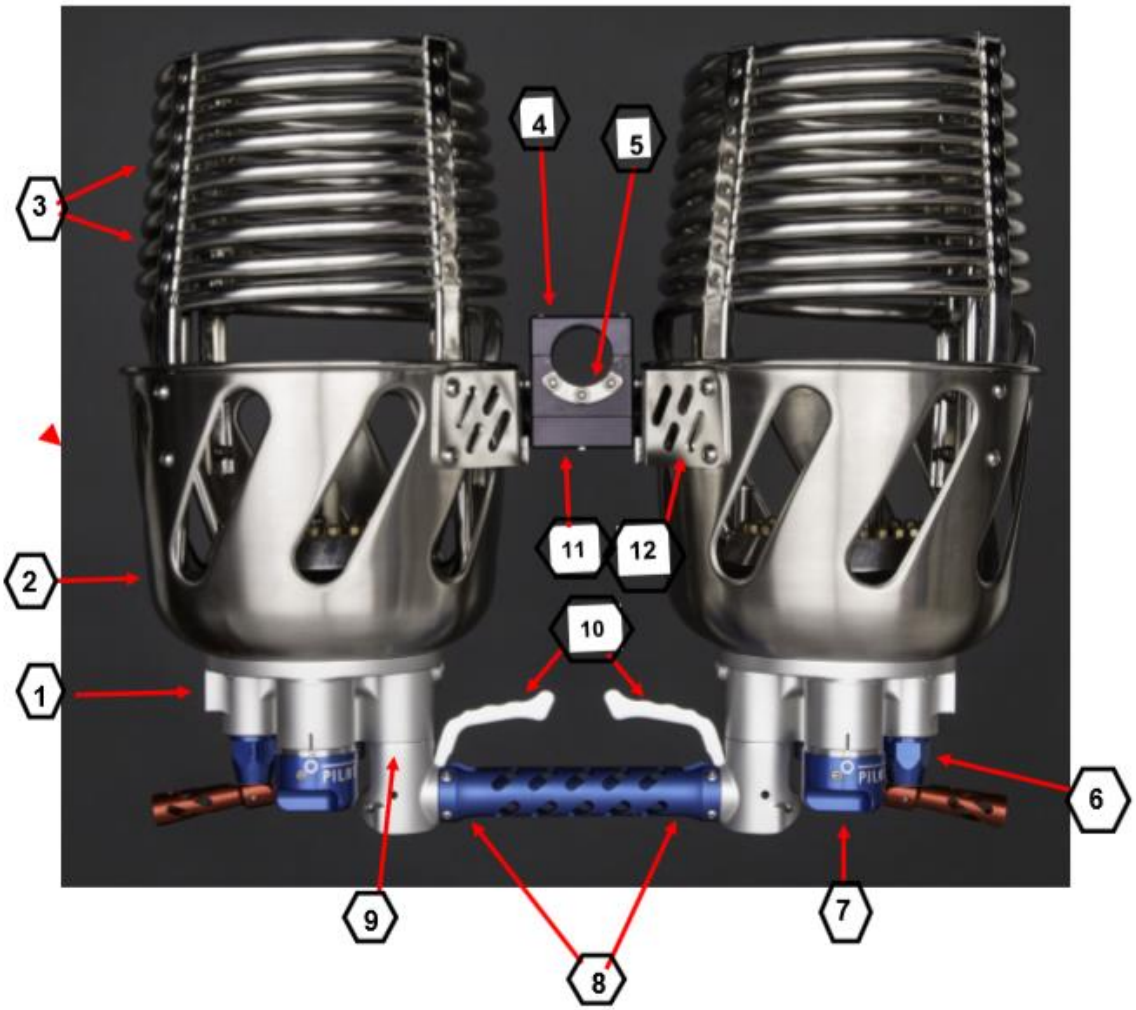

1 MAIN BLOCK
2 BURNER CAN
3 COIL ASSY.
4 GIMBLE BLOCK CAP UPPER
5 GIMBLE BLOCK ASSY.
6 LIQUID FIRE VALVE
7 PILOT LIGHT VALVE
8 HANDLE TUBE
9 MAIN VALVE
10 MAIN VALVE SQUEEZE HANDLE
11 GIMBLE BLOCK CAP LOWER
12 SWIVEL ASSY.

FIG 3.4.5. VORTECH BURNER SIDE VIEW

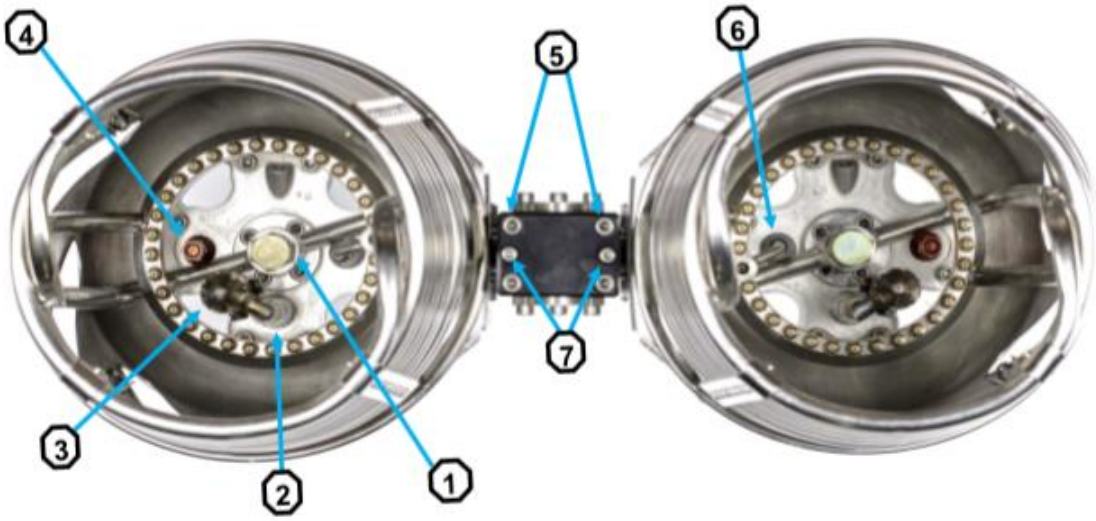

1 COIL POST
2 IGNITER ASSY.
3 PILOT LIGHT ASSY.
4 LIQUID FIRE JET

4 LIQUID FIRE JET ASSY.
5 GIMBLE BLOCK MOUNTING SCREWS
6 SLURPER TUBE ASSY.
7 GIMBLE TENSION SCREWS

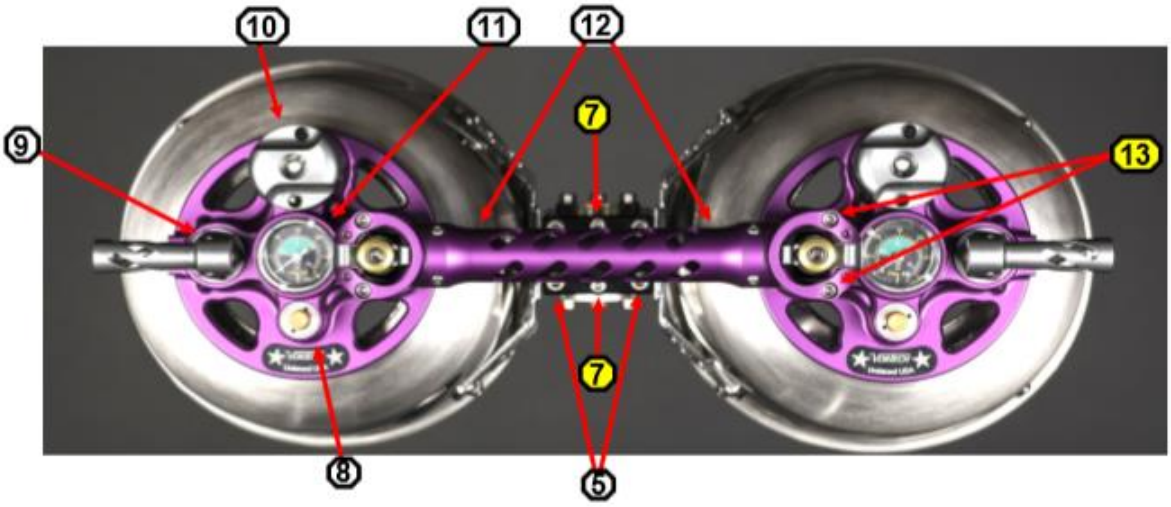

8 PIEZO IGNITER ASSY.
9 LIQUID FIRE TOGGLE HANDLE
10 PILOT LIGHT VALVE ASSY.
11 PRESSURE GAUGE ASSY.

12 HANDLE TUBE
13 HANDLE MOUNTING SCREWS
8 GIMBAL BLOCK MOUNTING SCREWS

FIG 3.4.5.1 VORTECH BURNER TOP AND BOTTOM VIEW

Date: March 16, 2018 Issue 2.4 Appendix C 19

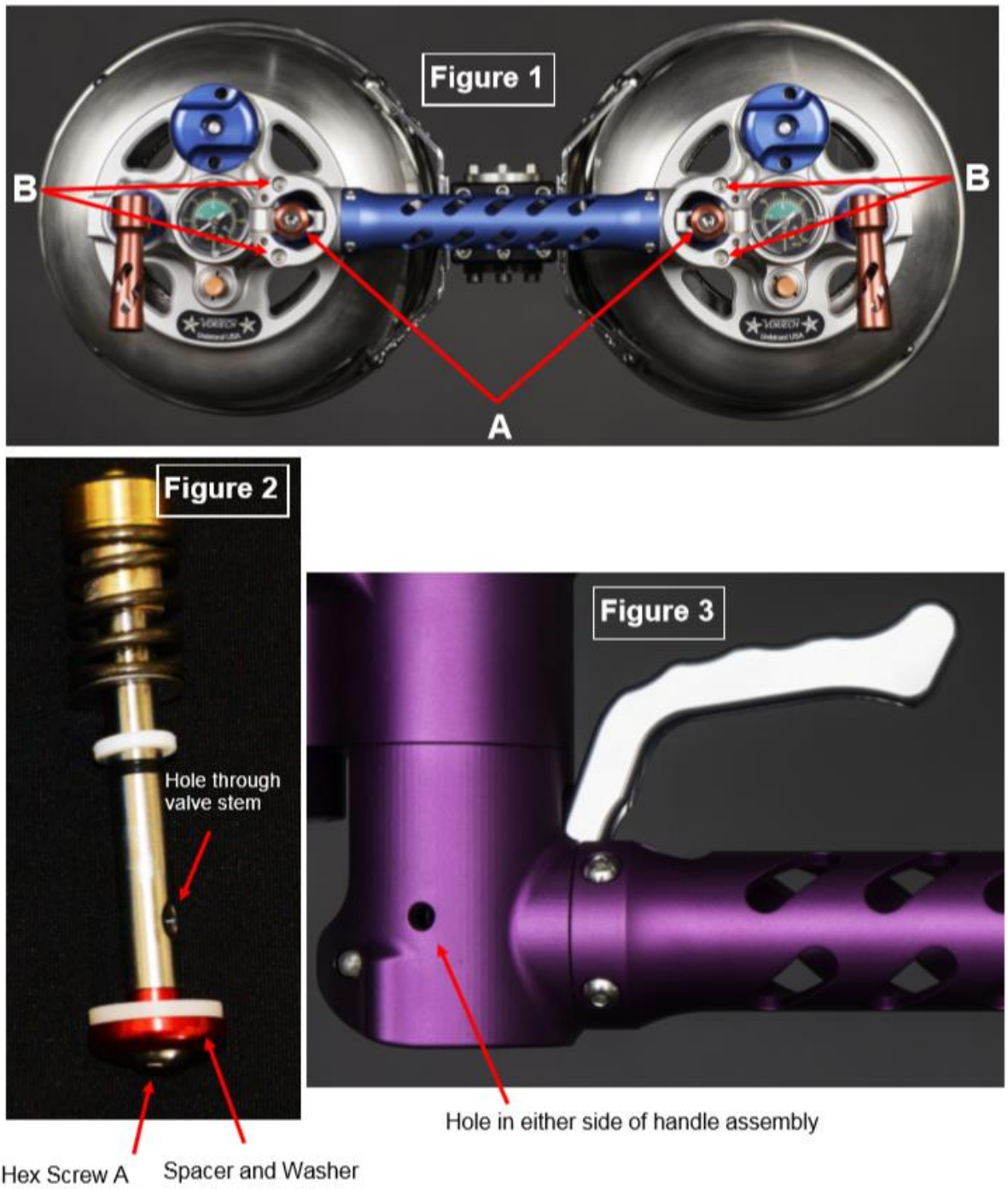

FIG 3.4.5.2 VORTECH HANDLE DISASSEMBLY

Date: March 16, 2018 Issue 2.4 Appendix "C" 20 of 45

FIG 5.3.9 CORRECT CYLINDER STRAP PLACEMENT TO SECURE FUEL TANK

March 16, 2018 Issue 2.4 Appendix "C" 35 of 45

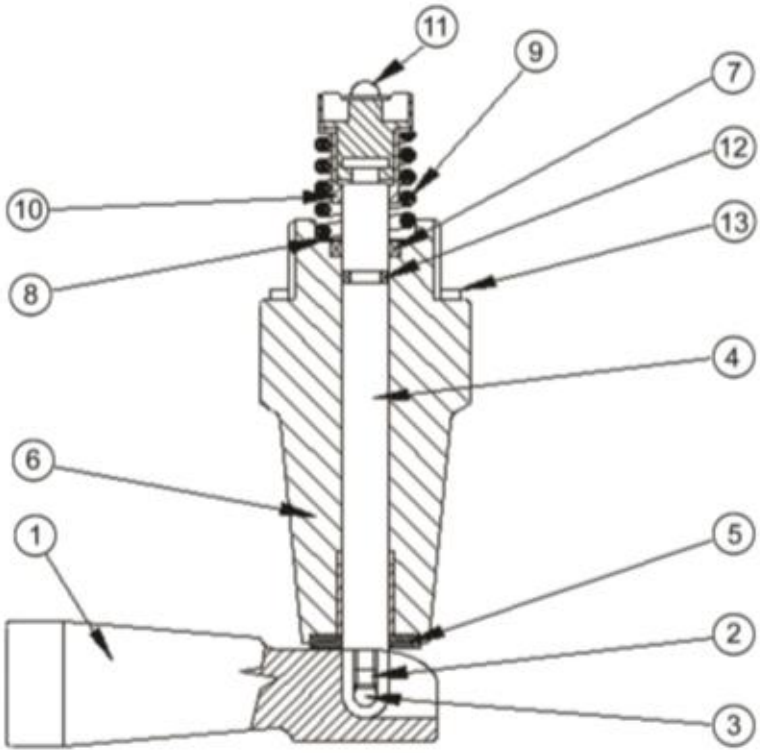

1. VALVE HANDLE
2. SET SCREWS
3. PIVOT PIN
4. VALVE STEM
5. THRUST WASHER
6. VALVE BONNET
7. STEM SEAL
8. WASHER
9. SPRING
10. SEAT CARRIER SLEEVE
11. VALVE SEAT CARRIER
12. QUAD RING SEAL
13. COPPER WASHER

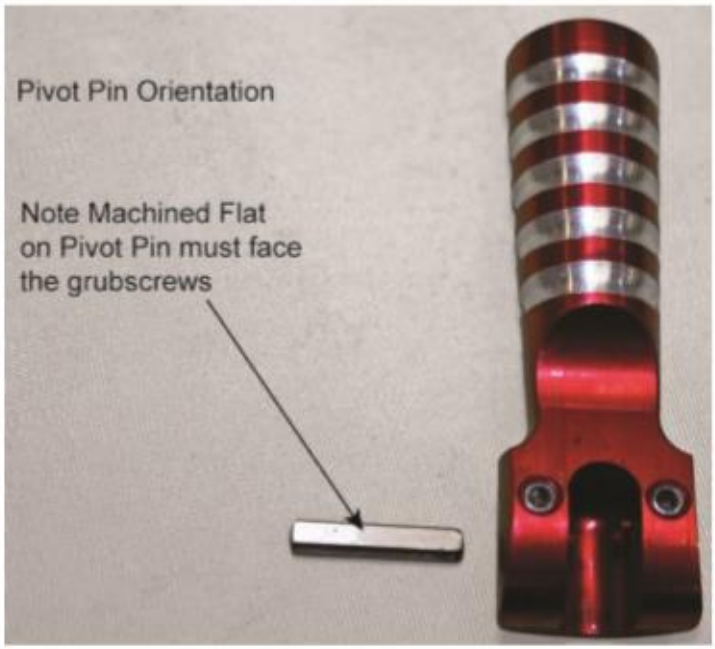

FIG 5.4.2 VALVE ASSEMBLY COMPONENTS

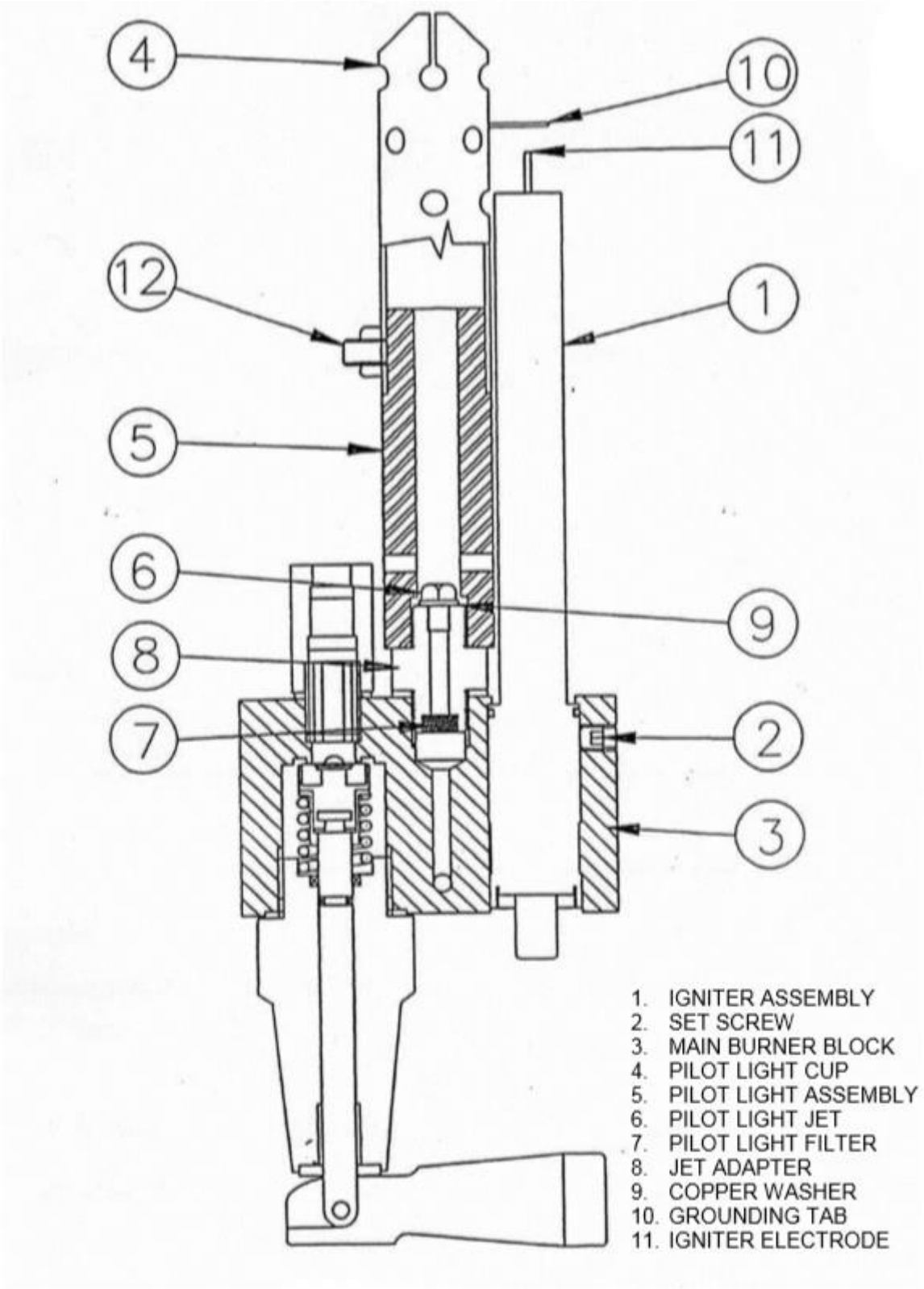

FIG 5.4.3 PILOT LIGHT ASSEMBLY

March 16, 2018 Issue 2.4 Appendix "C" 37 of 45

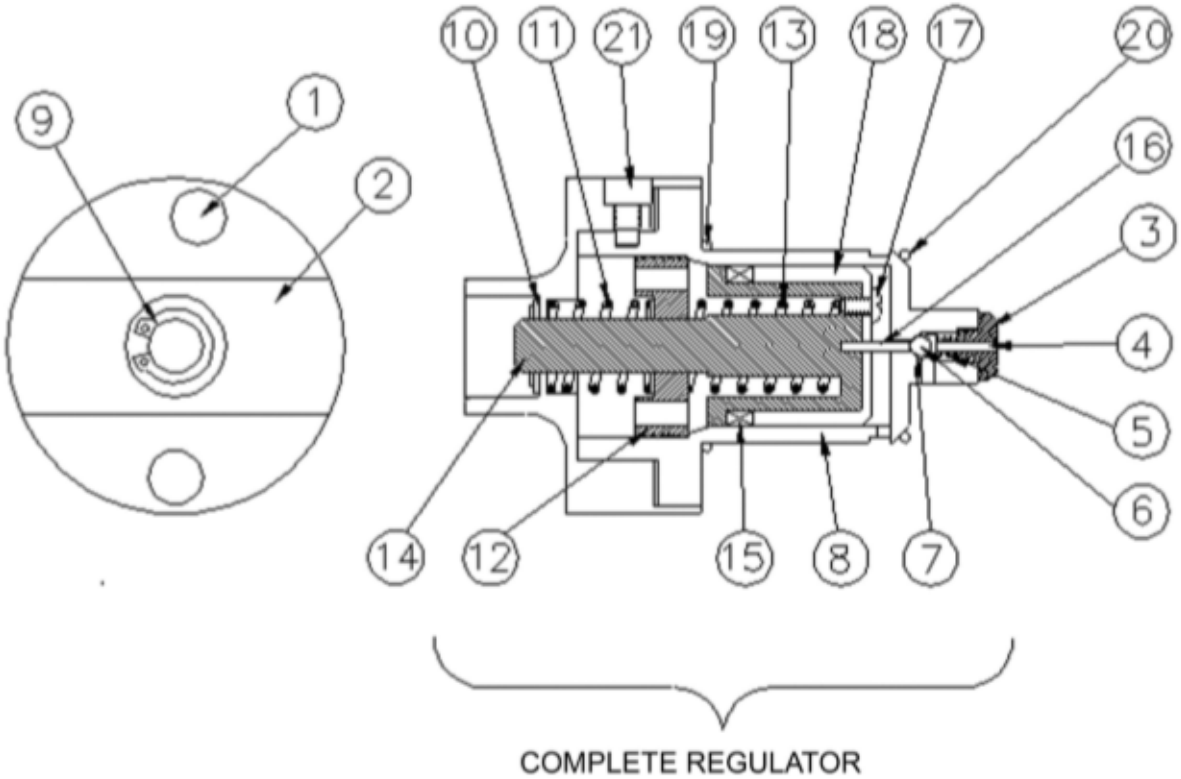

1. HANDLE HOLE
2. HANDLE
3. SPRING RETAINING SCREW
4. SPRING GUIDE
5. SPRING
6. VITON SEALING BALL
7. VALVE SEAT
8. REGULATOR BODY
9. CIRCLIP
10. WASHER
11. HANDLE SPRING
12. SPRING RETAINER
13. MAIN REGULATOR SPRING
14. PISTON
15. REGULATOR PISTON SEAL
16. PISTON PIN
17. SCREW
18. PISTON CAP
19. O-RING (LARGER)
20. O-RING (SMALLER)
21. RETAINING SCREWS

FIG 5.4.4 PILOT REGULATOR ASSEMBLY

March 16, 2018 Issue 2.4 Appendix "C" 38 of 45

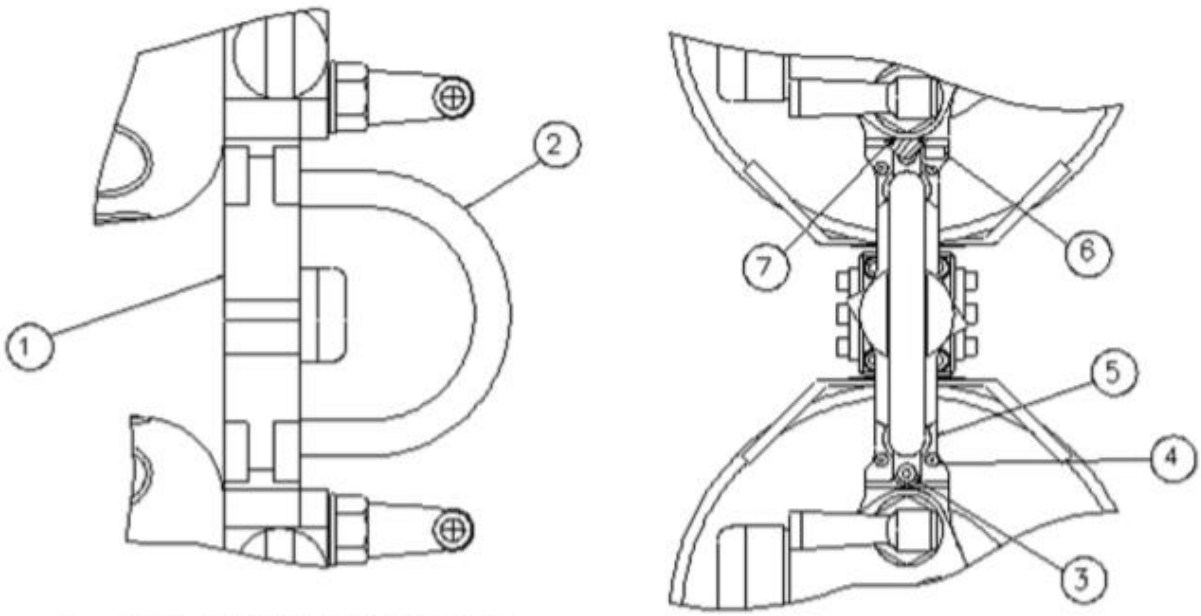

1 CROSSFLOW ASSEMBLY
2 HANDLE ASSEMBLY
3 M5 CAP HEAD SCREW
4 HEX DRIVE COUNTERSINK SCREW
5 COVER BLOCK
6 M6 CAP HEAD SCREW
7 O-RING SEAL

FIG 5.4.5 PART VIEW SHOWING CROSSFLOW ASSEMBLY

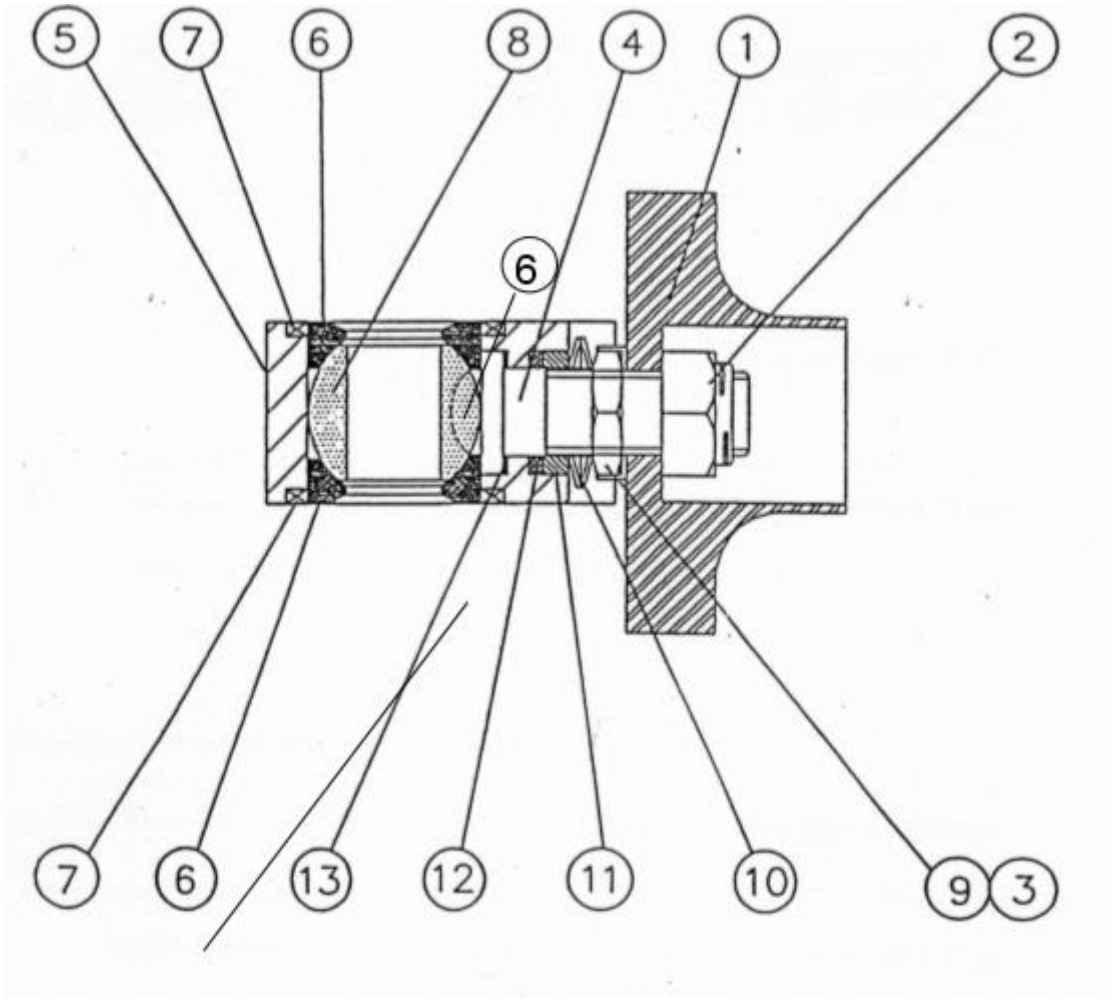

1. VALVE HANDLE
2. SELF LOCKING NUT
3. LOCKING CLIP
4. VALVE STEM
5. VALVE BODY
6. BALL SEALS (TWO)
7. BODY CONNECTOR SEALS
8. BALL
9. PLAIN GLAND NUT
10. (2) DISC SPRINGS
11. SPACER
12. GLAND SEALS (OUTER) (THREE)
13. GLAND SEAL (INNER) (ONE)

FIG 5.4.5.1 CROSS-OVER VALVE ASSEMBLY

March 16, 2018 Issue 2.4 Appendix "C" 40 of 45

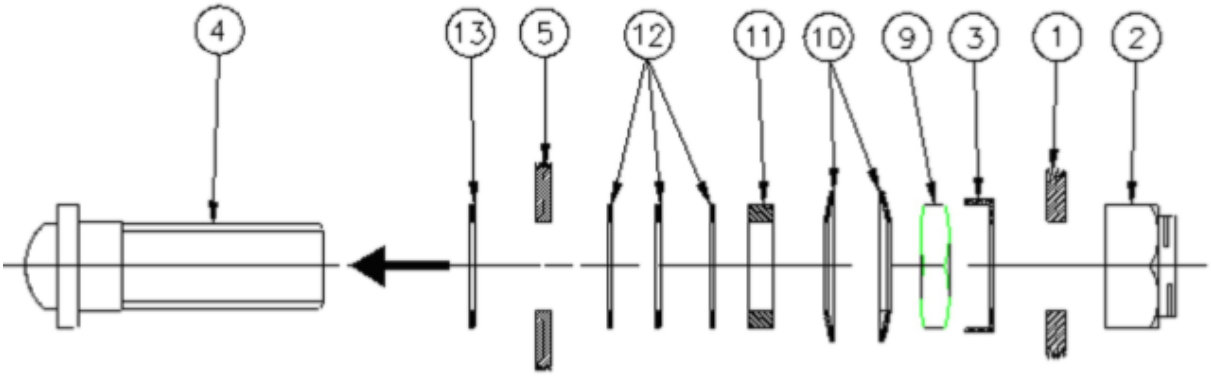

1 VALVE HANDLE
2 SELF-LOCKING NUT
3 LOCKING CLIP
4 STEM
5 VALVE BODY
9 GLAND NUT
10 DISC SPRINGS
11 SPACER RING
12 GLAND SEALS
13 VALVE STEM SEALS

FIG 5.4.5.2 ASSEMBLY SEQUENCE OF CROSS OVER VALVE STEM COMPONENTS

March 16, 2018 Issue 2.4 Appendix "C" 41 of 45

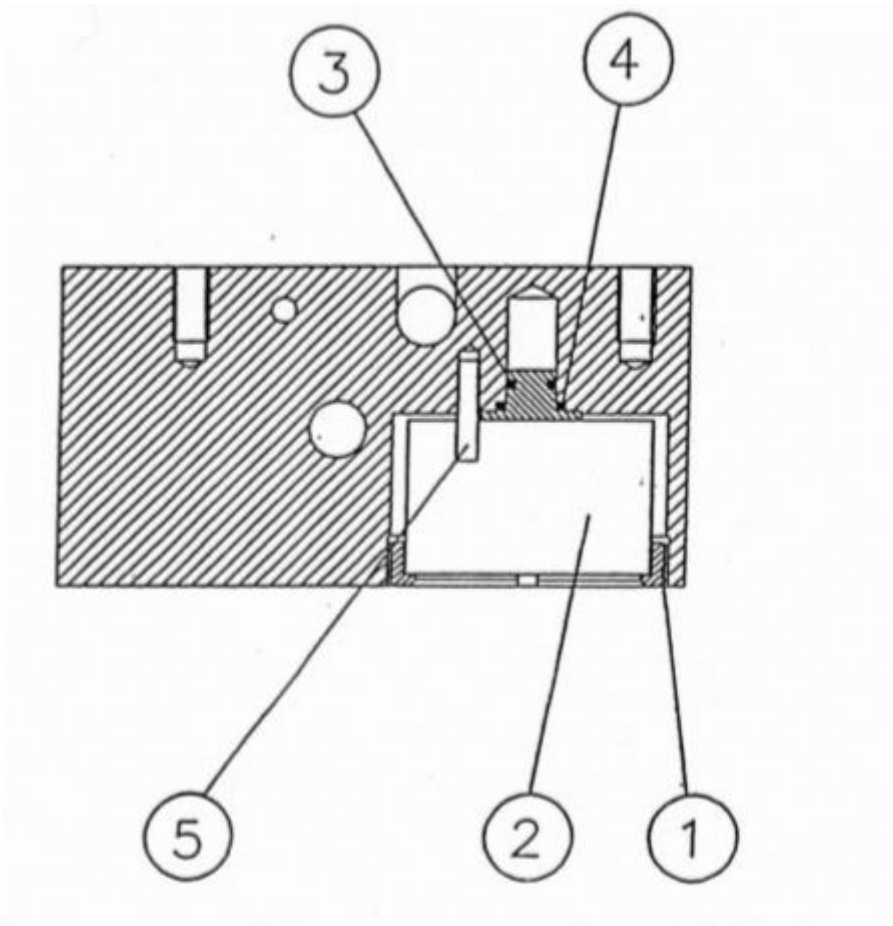

1 BEZEL RING
2 GAUGE
3 O-RING SEAL
4 O-RING SEAL
5 ALIGNMENT PEG

FIG 5.4.6 PRESSURE GAUGE INSTALLATION

March 16, 2018 Issue 2.4 Appendix "C" 42 of 45

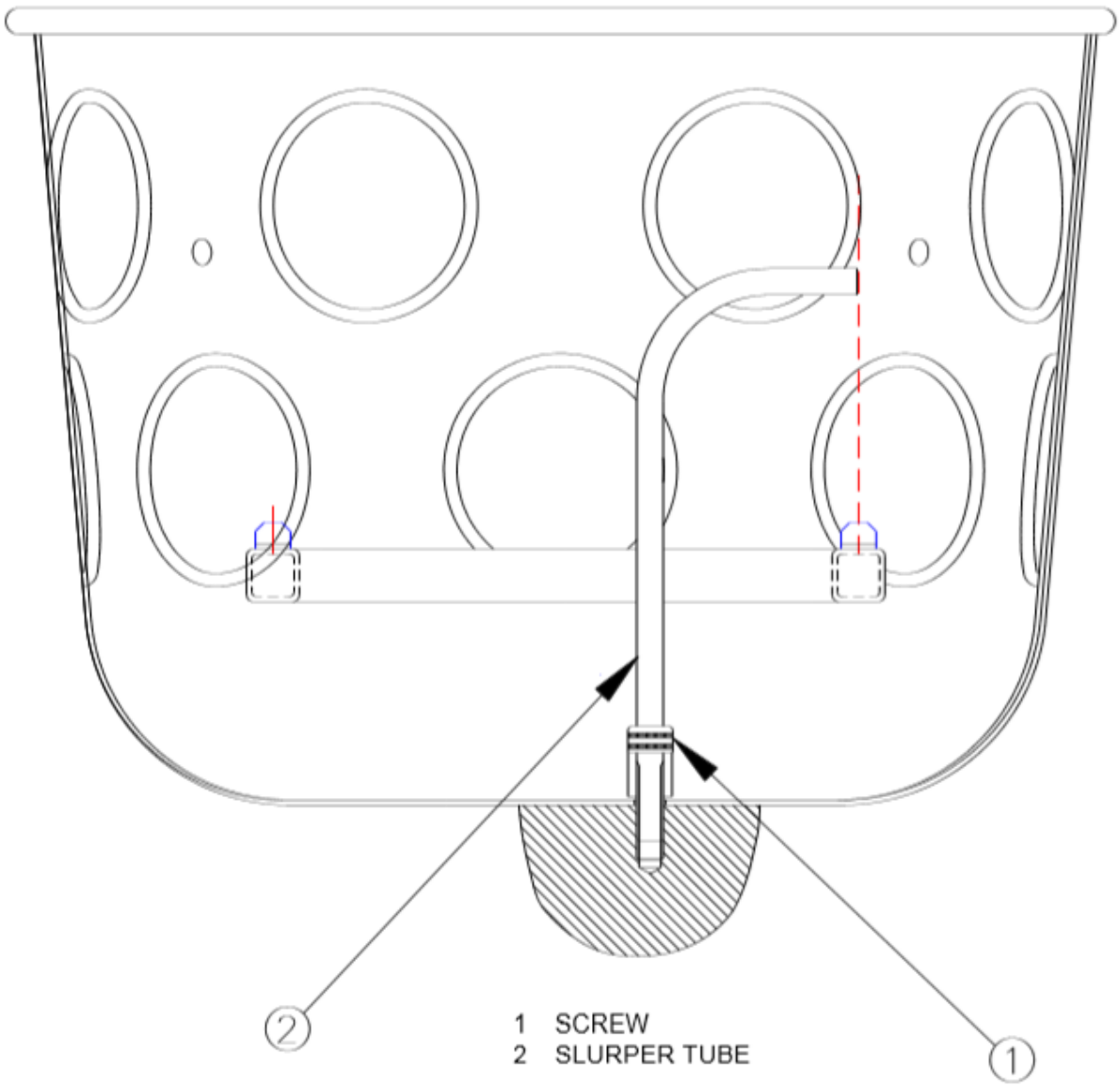

FIG 5.4.8 SLURPER TUBE ADJUSTMENT

March 16, 2018 Issue 2.4 Appendix "C" 43 of 45

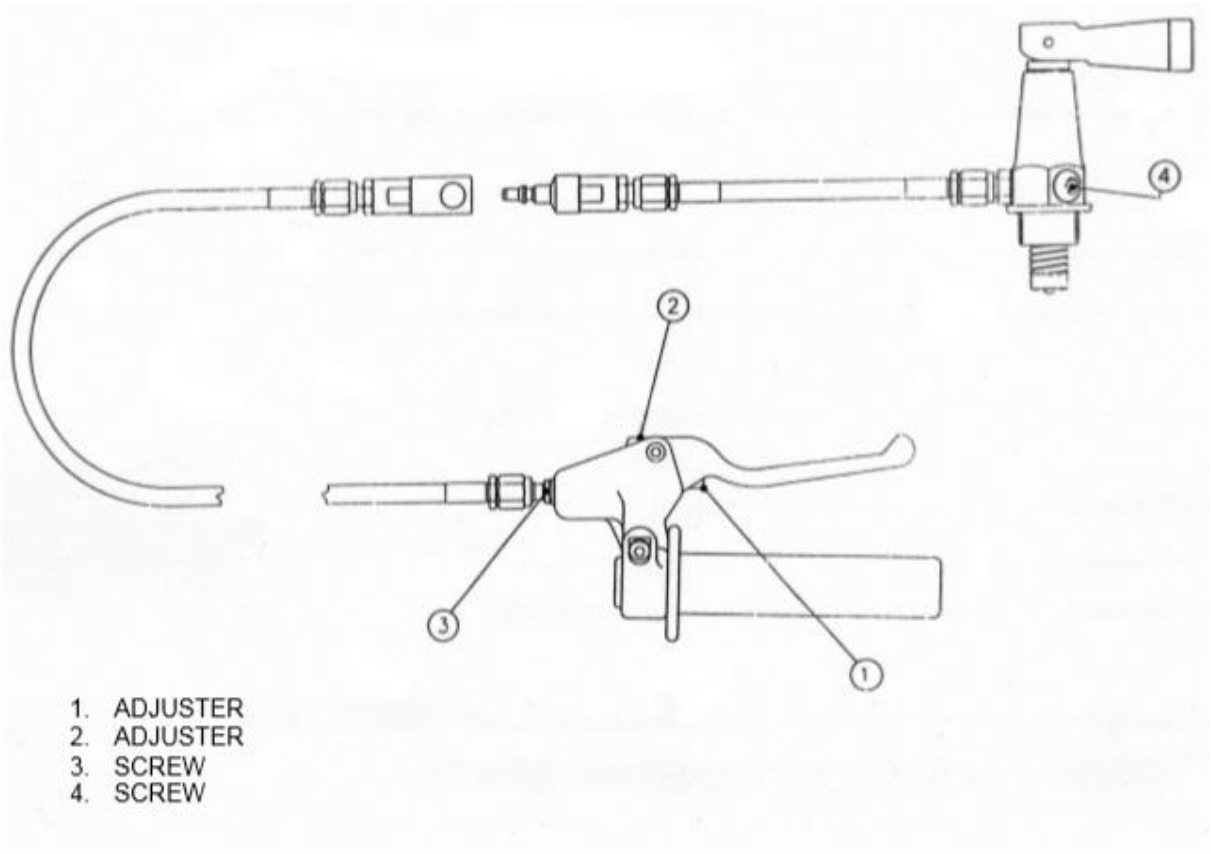

FIG 5.4.9 HYDRAULIC REMOTE BURNER CONTROL

March 16, 2018 Issue 2.4 Appendix "C" 44 of 45

SECTION 10 – SUPPLEMENTS

No change.

LET US HELP YOU!

In case that you have any suggestion, difficulty, problem or comment, please contact our technical department at:

technical@kubicekballoons.cz

+420 545 422 638

BALÓNY KUBÍČEK spol. s r. o. e-mail: sales@kubicekballoons.cz • www.kubicekballoons.eu Seat: Brno 61400 • Jarní 2a • Czech Republic tel.: +420 545 422 620, • fax: +420 545 422 621